Instruction Sheet
PN 51A-225/rev.B
January 2006

Model 225

Sanitary and CIP Toroidal Sensor

For additional information, please refer to the Instruction Manuals CD shipped with this product, or visit our website at *www.emersonprocess.com/raihome/liquid/*.

CAUTION

SENSOR/PROCESS APPLICATION COMPATIBILITY

The wetted sensor materials may not be compatible with process composition and operating conditions. Application compatibility is entirely the responsibility of the user.

CAUTION

BEFORE REMOVING THE SENSOR, be absolutely certain the process pressure is reduced to 0 psig and the process temperature is at a safe level!

SPECIFICATIONS - SENSORS

MODEL	Wetted Materials	Temperature	Pressure
225-03	PEEK (glass-filled)	230°F (110°C)	200 psig (1480 kPa abs)
225-07	PEEK (unfilled)	266°F (130°C)	200 psig (1480 kPa abs)
225-08	USP Class VI unfilled PEEK	266°F (130°C)	200 psig (1480 kPa abs)

INSTALLATION

The sensor may be installed in either a tank or pipe using a customer-supplied Tri-clamp and tee assembly. The sensor requires a 2-inch Tri-clamp, a 2-inch type 1 gasket, and a 2-inch tank ferrule or tee.

Keep at least 1 in. (2.5 cm) between sensor and pipe wall. If clearance is too small, calibrate the sensor in place. Ensure that the sensor is completely submerged in liquid. Horizontal mounting is best.

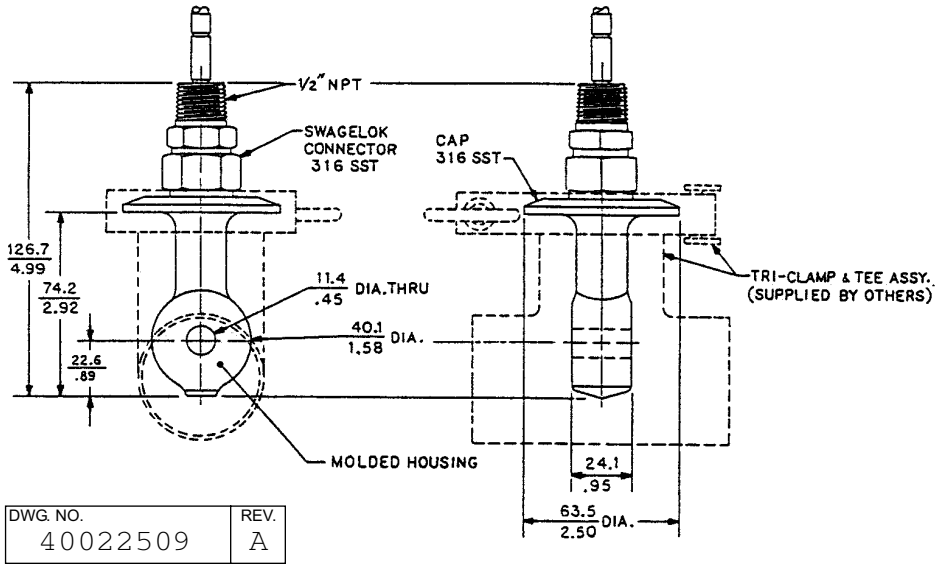

FIGURE 1. Installation Dimensions and Mounting Options

ROSEMOUNT® Analytical

EMERSON™ Process Management

WIRING

Keep sensor wiring away from ac conductors and high current demanding equipment. **Do not cut cable. Cutting the cable may void the warranty.**

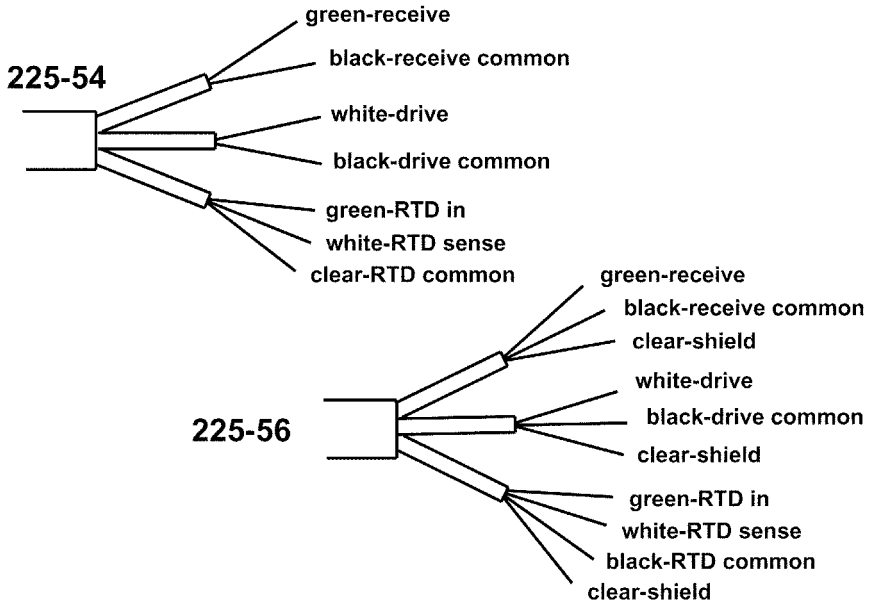

FIGURE 2. Wire Functions

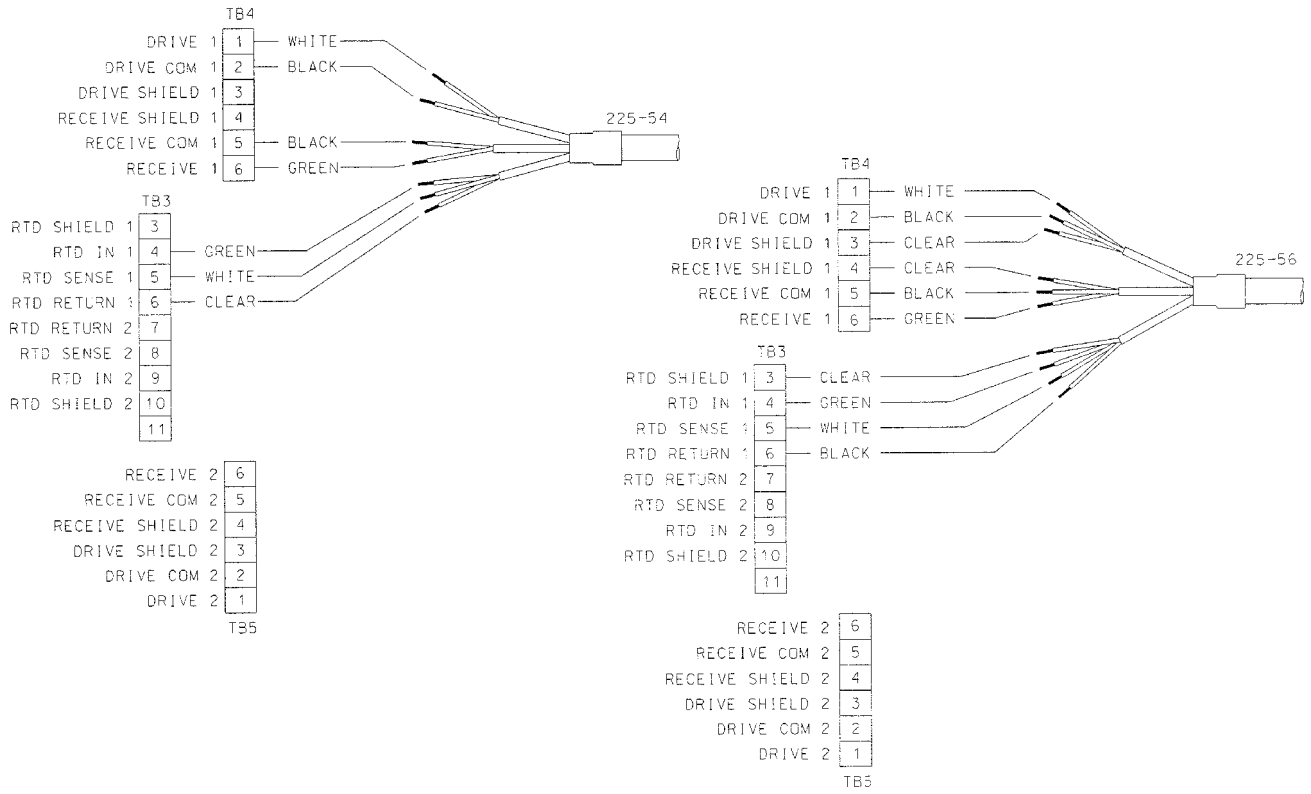

FIGURE 3. Wiring Model 225-54 and 225-56 sensors to single input panel mount 1055 analyzer

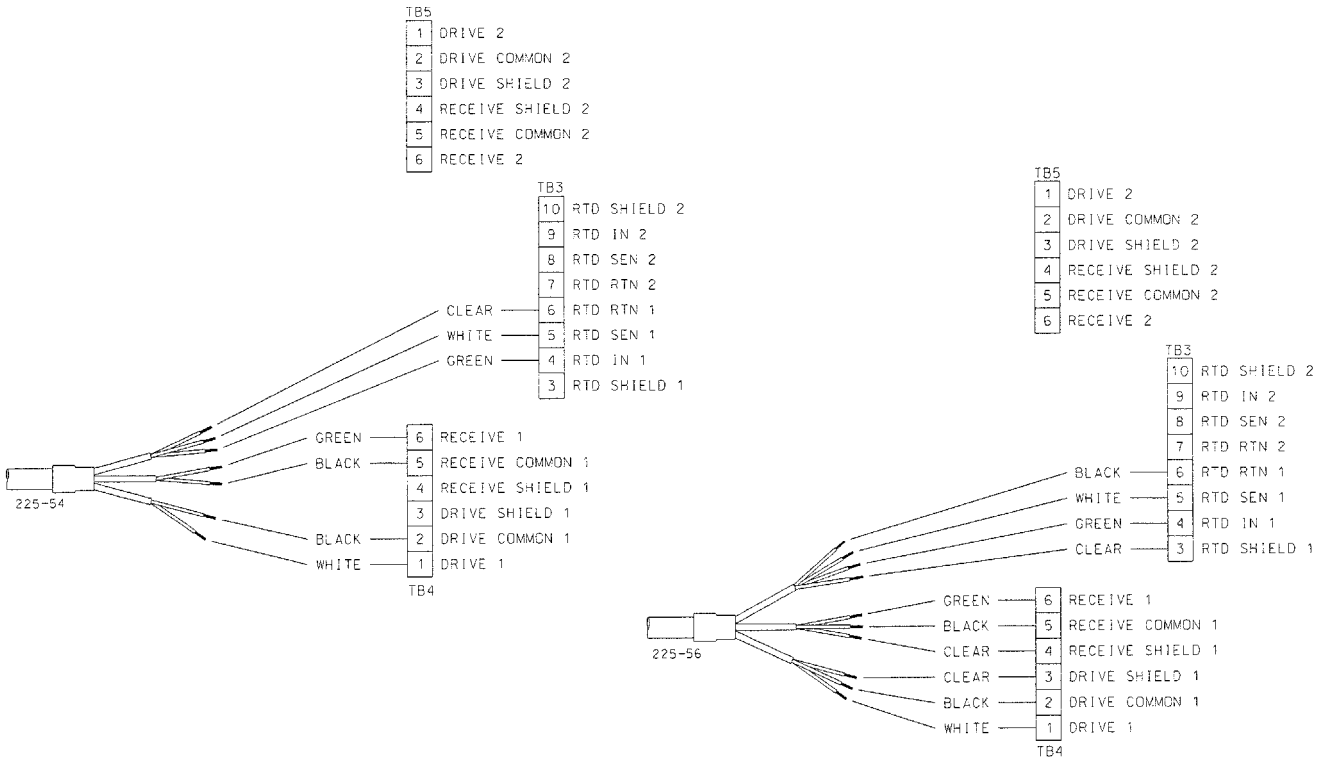

FIGURE 4. Wiring Model 225-54 and 225-56 sensors to single input wall/pipe mount 1055 analyzer

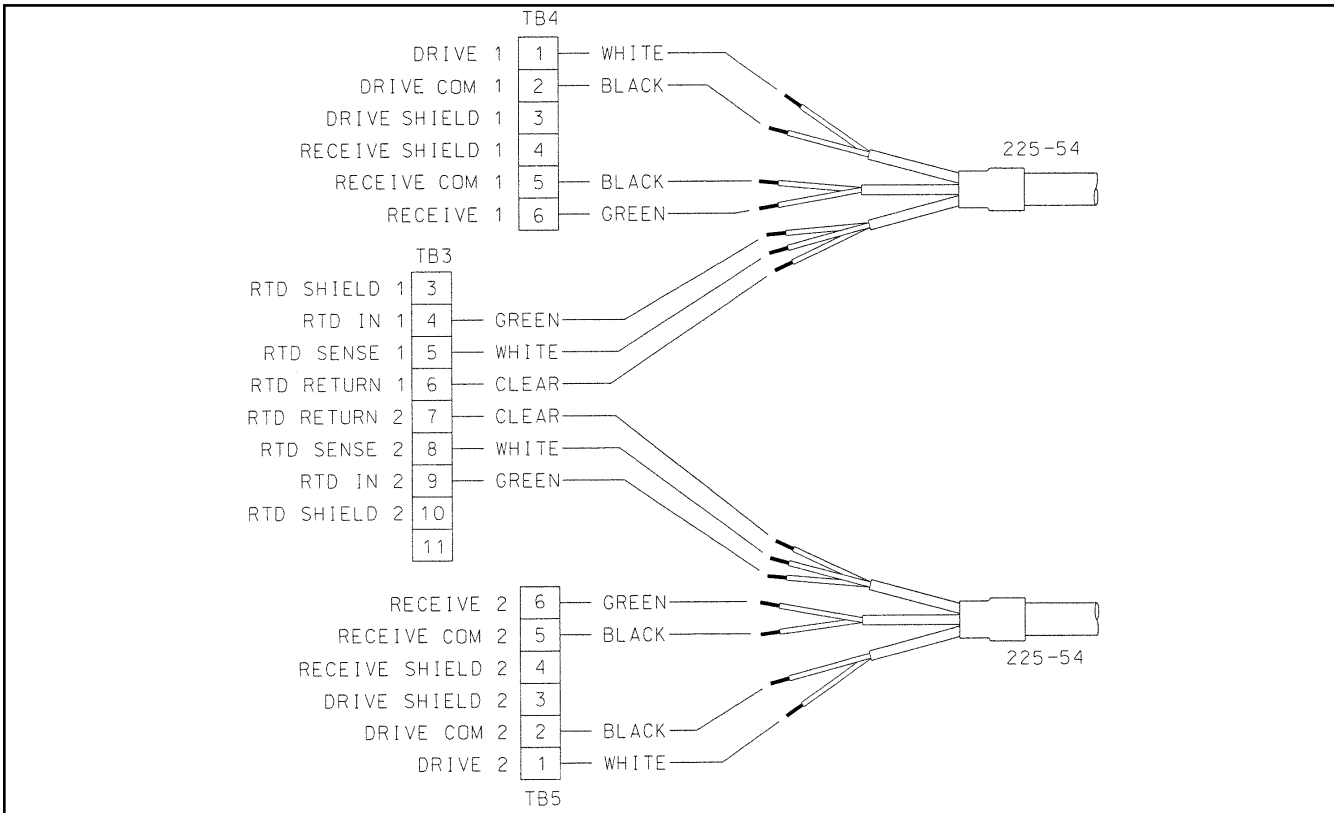

FIGURE 5. Wiring 225-54 sensors to dual input panel mount 1055 analyzer

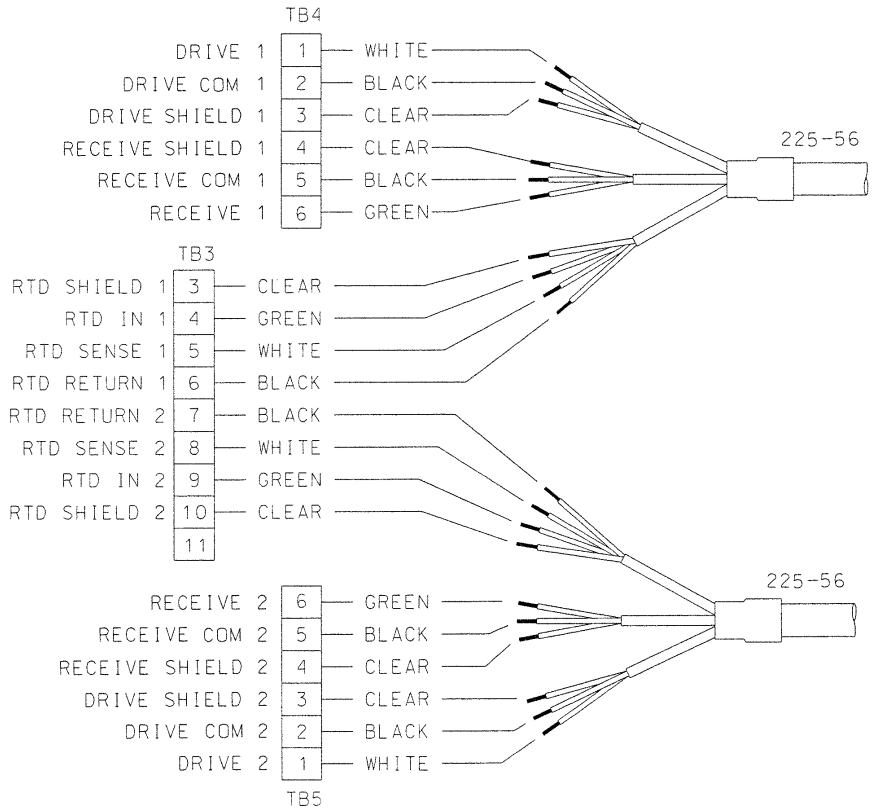

FIGURE 6. Wiring 225-56 sensors to dual input panel mount 1055 analyzer

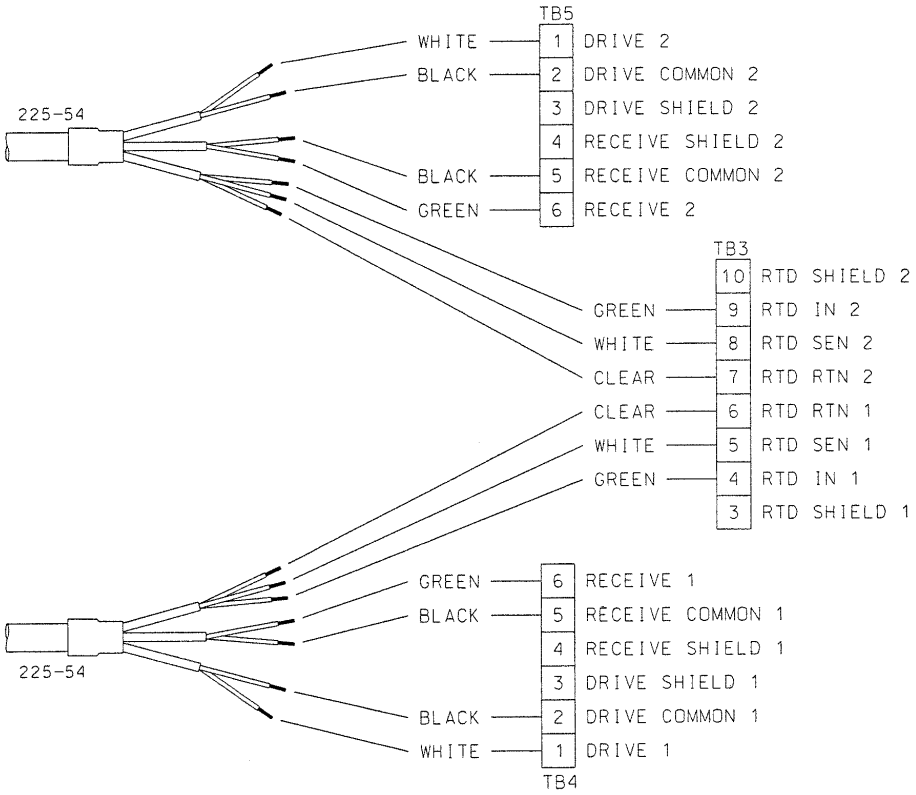

FIGURE 7. Wiring 225-54 sensor to dual input wall/pipe mount 1055 analyzer

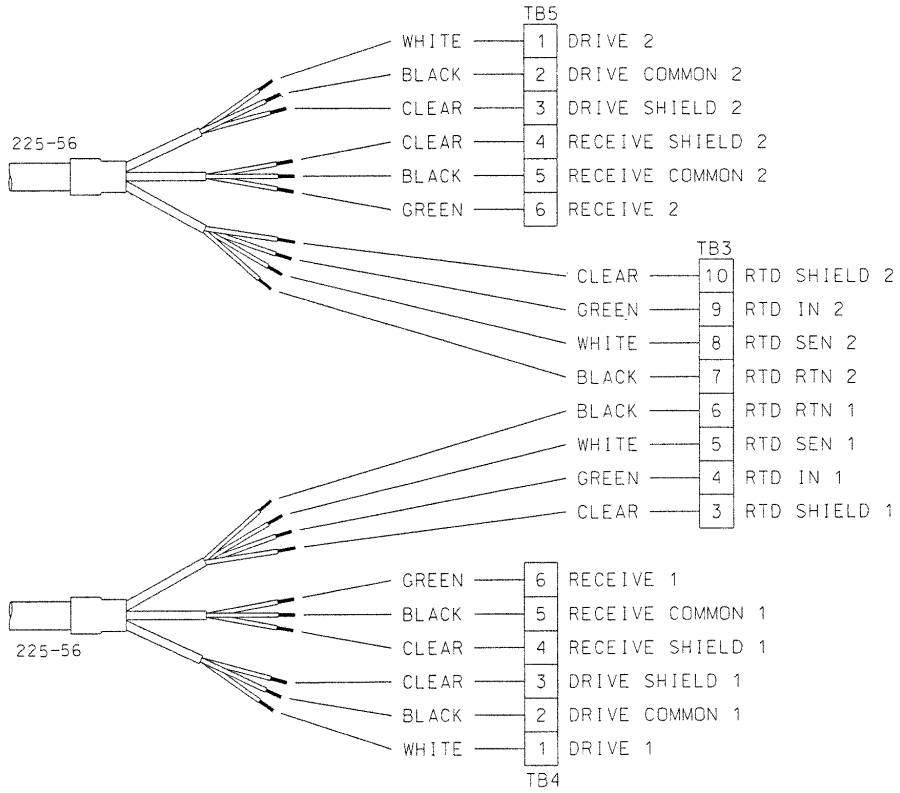

FIGURE 8. Wiring 225-56 sensor to dual input wall/pipe mount 1055 analyzer

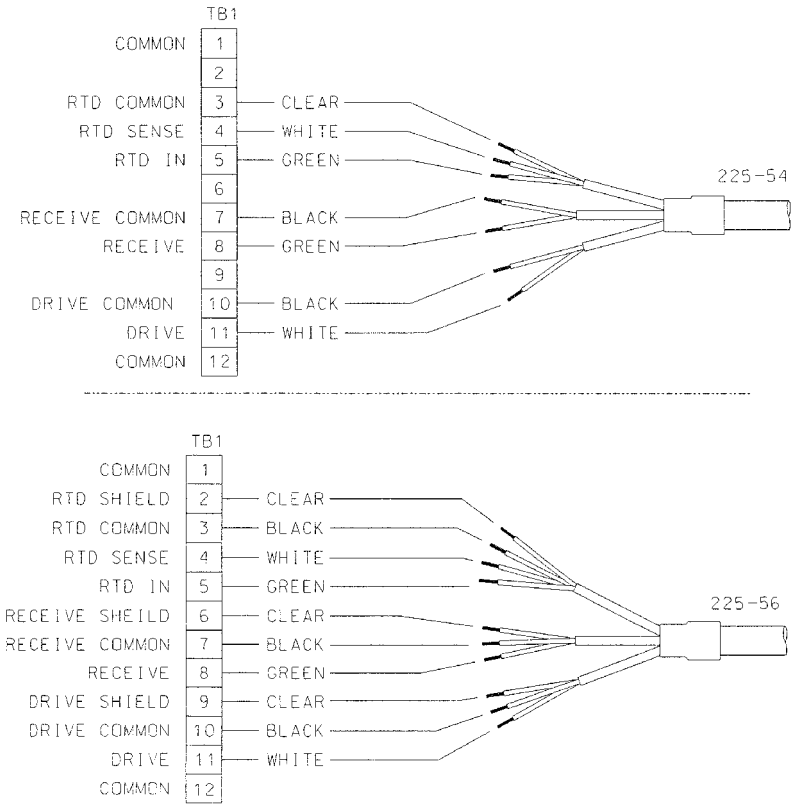

FIGURE 9. Wiring 225-54 and 225-56 sensors to 54eC analyzer

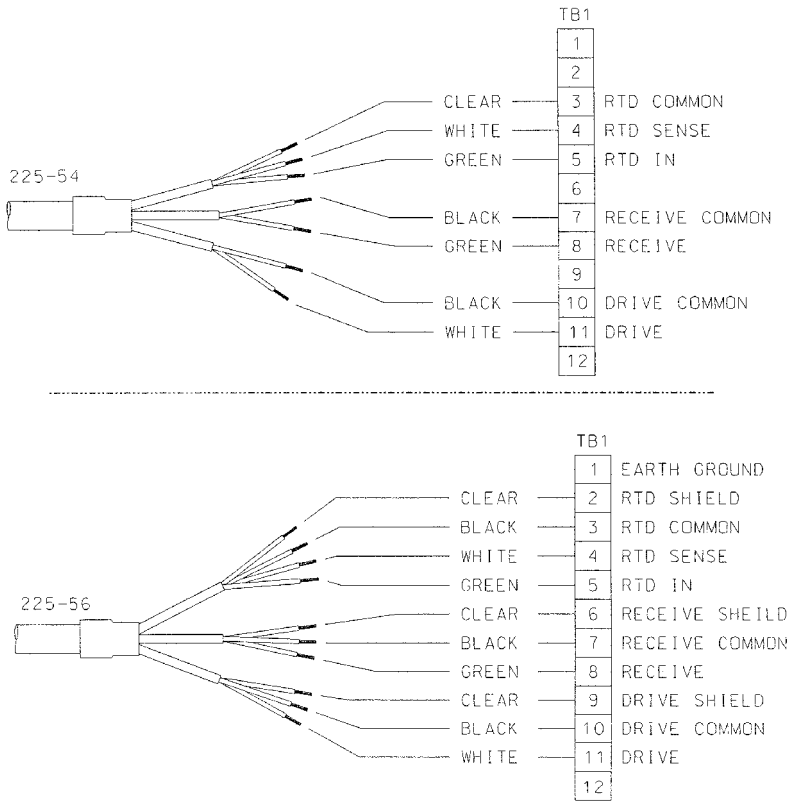

FIGURE 10. Wiring 225-54 and 225-56 sensors to 54C analyzer

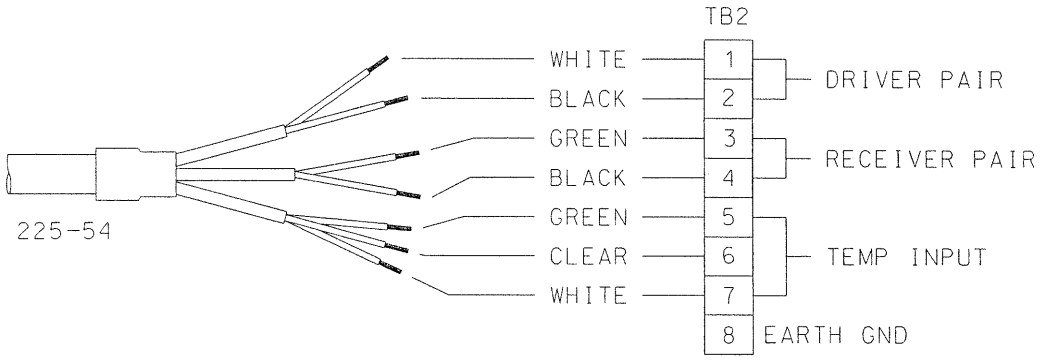

FIGURE 11. Wiring 225-54 sensor to 1054BT analyzer

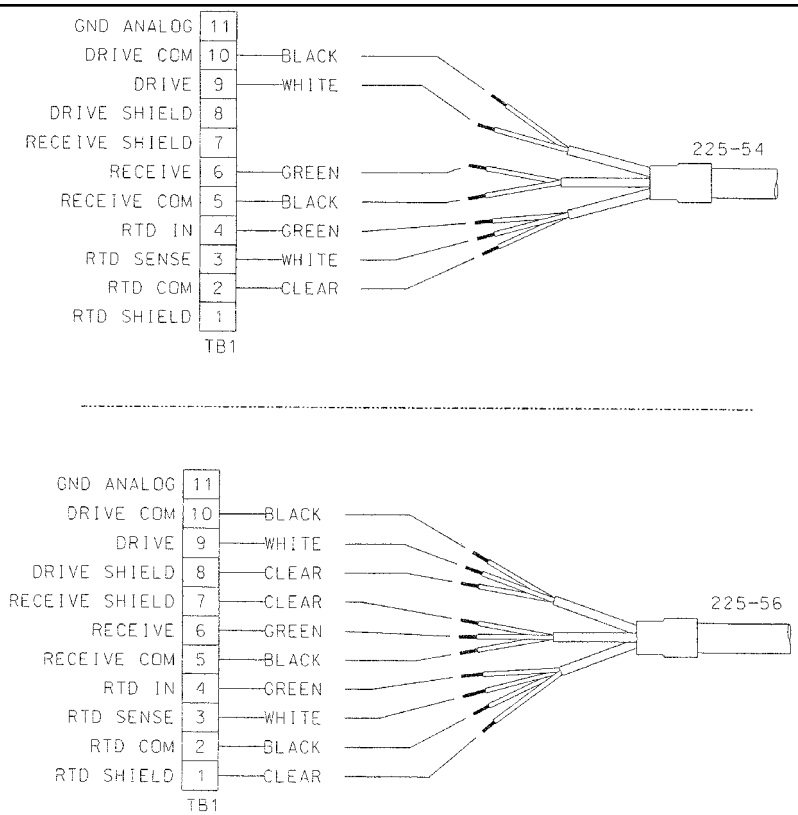

FIGURE 12. Wiring 225-54 and 225-56 sensors to Xmt-T panel mount transmitter

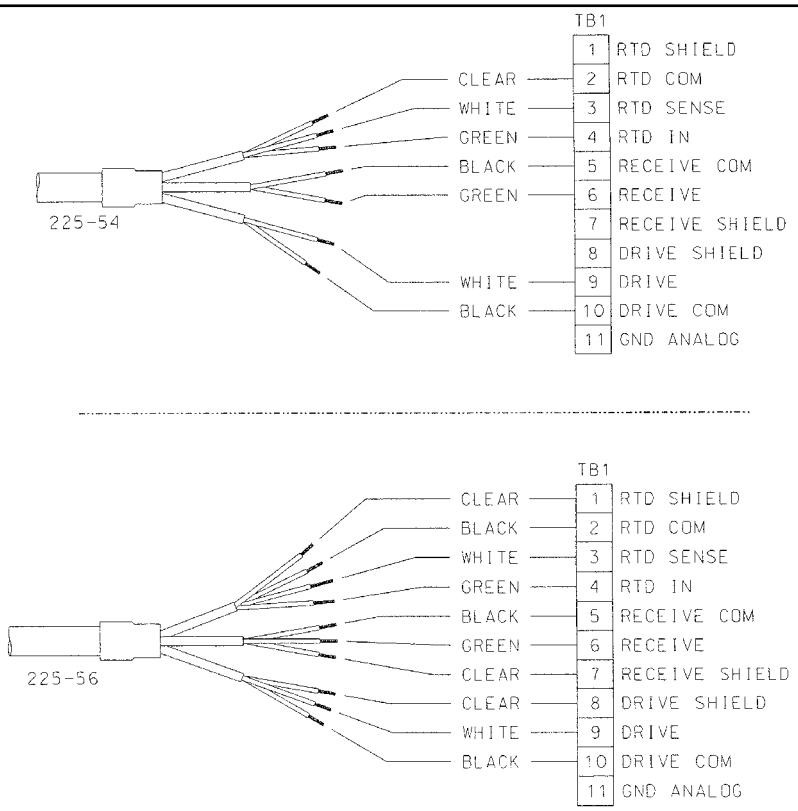

FIGURE 13. Wiring 225-54 and 225-56 sensors to Xmt-T pipe/wall mount transmitter

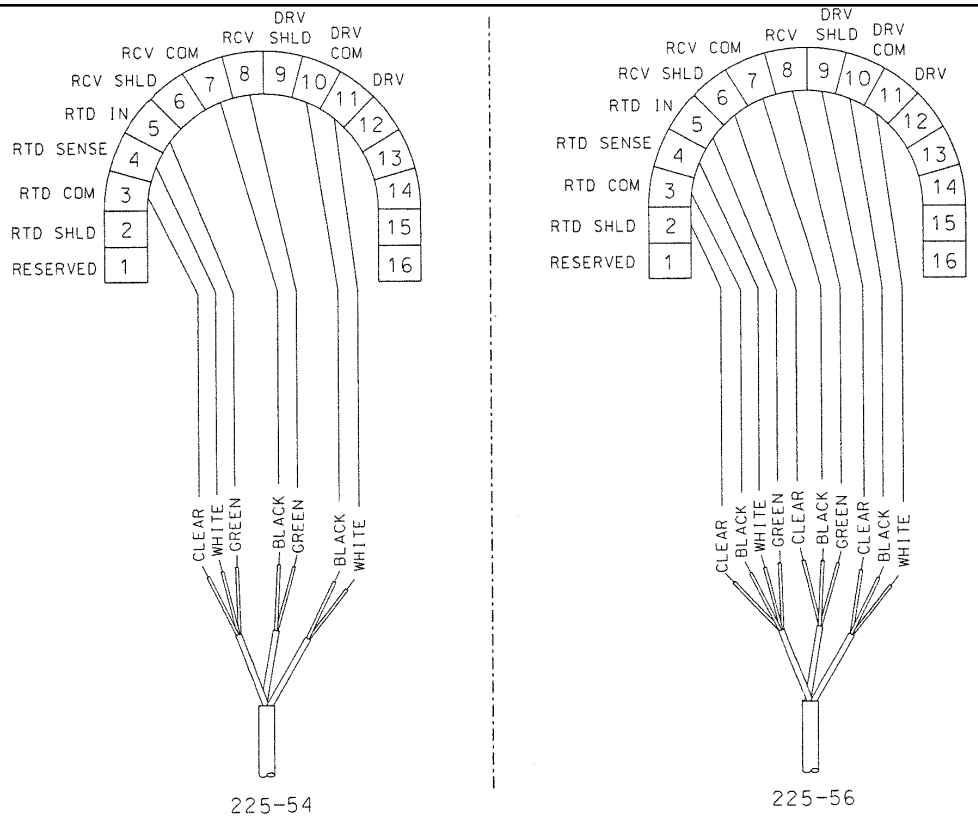

FIGURE 14. Wiring 225-54 and 225-56 sensors to 5081-T transmitter

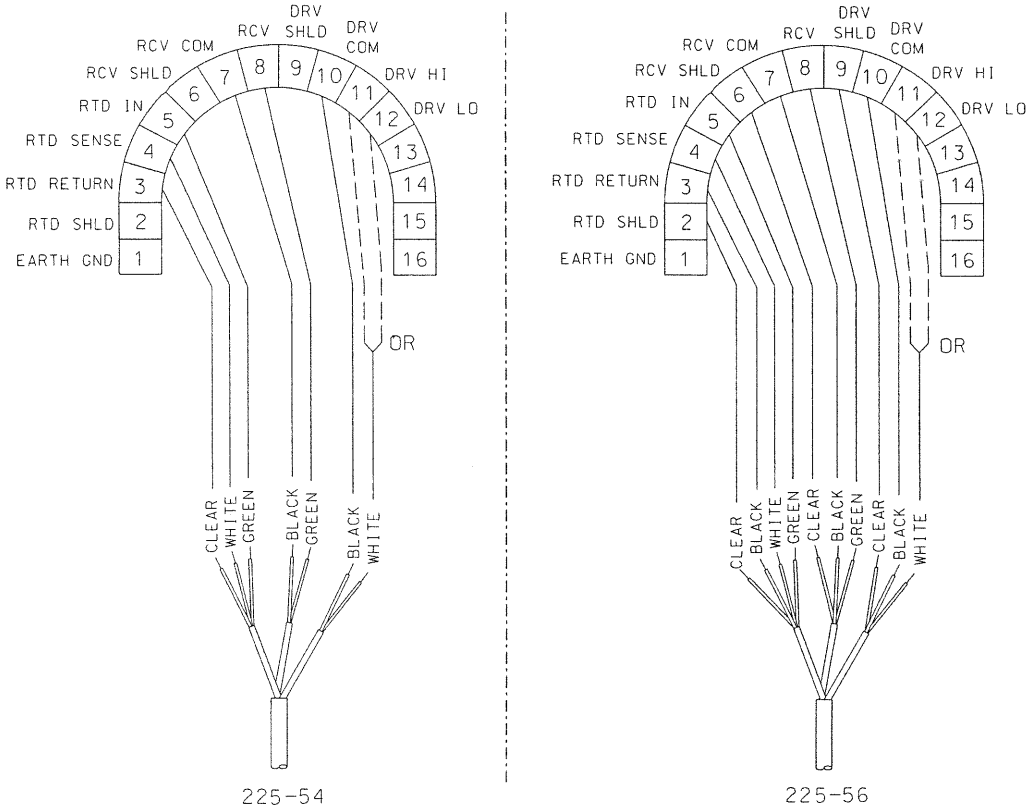

FIGURE 15. Wiring 225-54 and 225-56 sensors to 3081-T and 4081-T transmitters

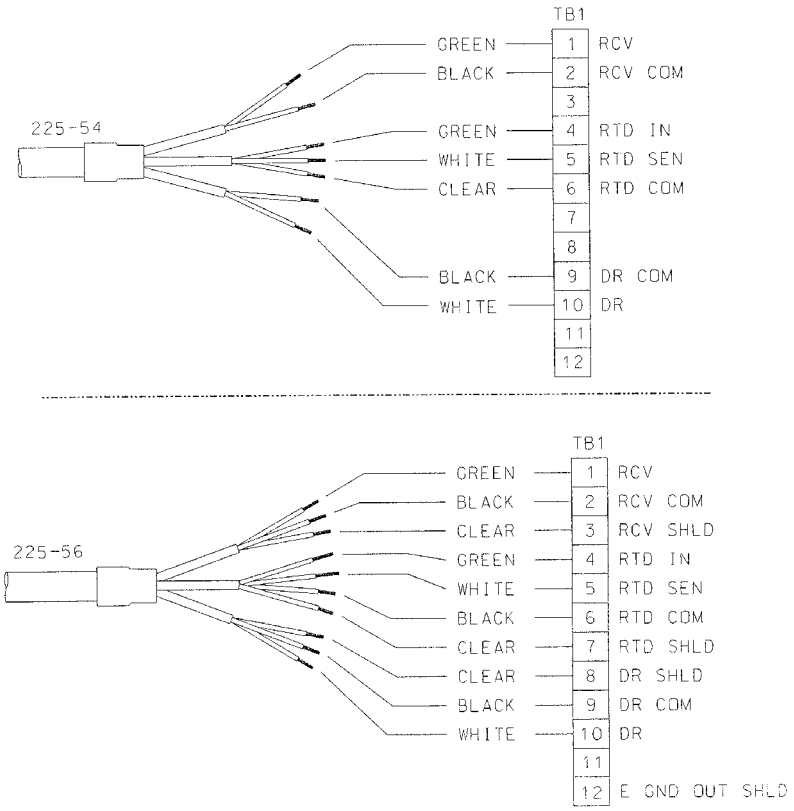

FIGURE 16. Wiring 225-54 and 225-56 sensors to 2081T transmitter

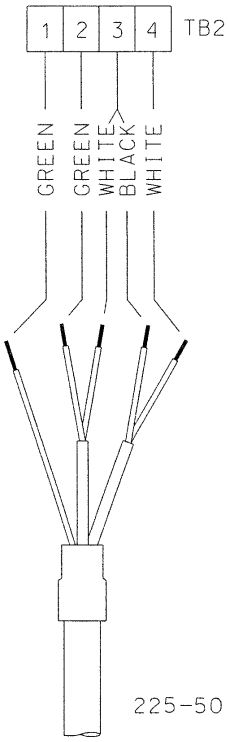

FIGURE 17. Wiring 225-50 sensor to 1181T transmitter

WIRING THROUGH A REMOTE JUNCTION BOX

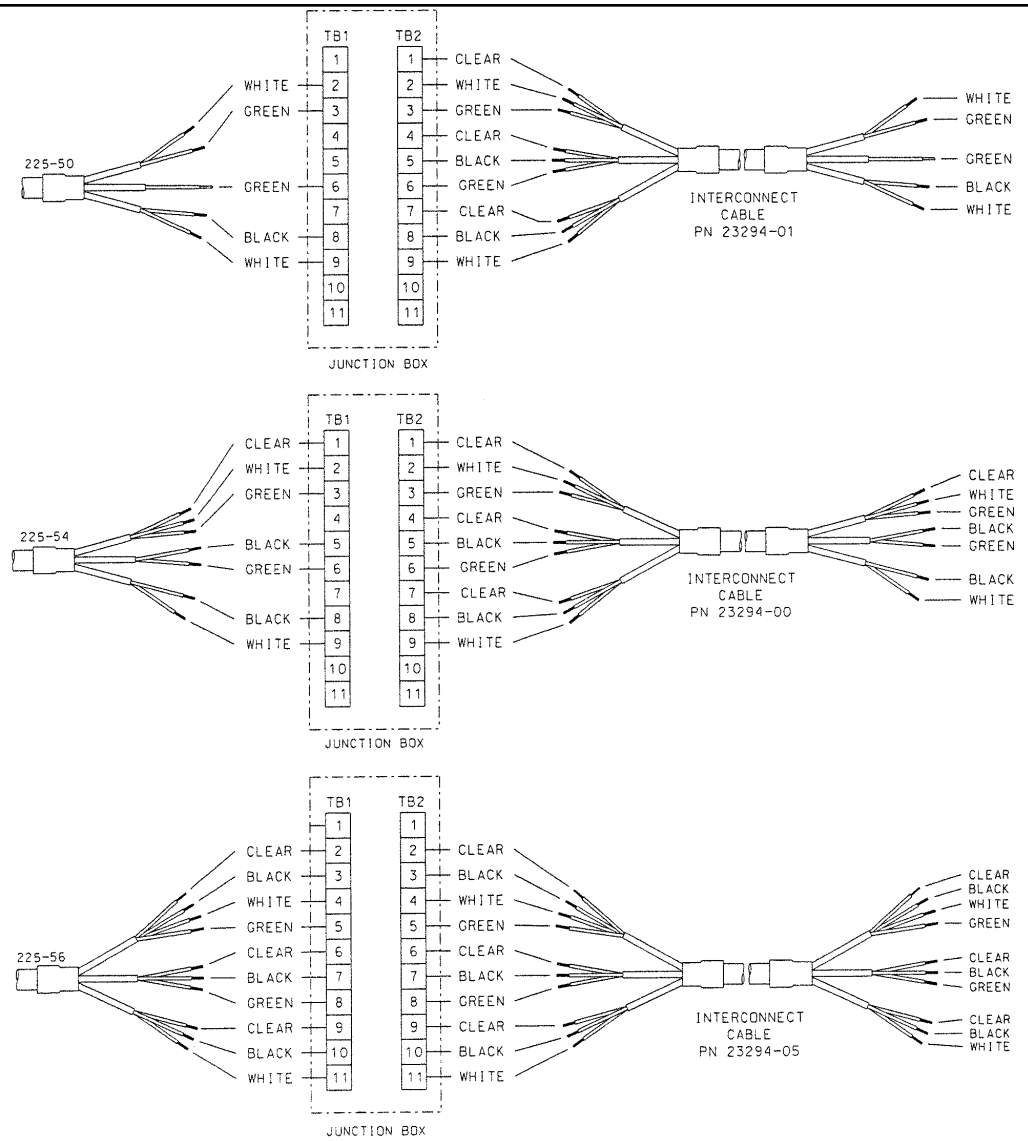

FIGURE 18. Wiring sensors through a remote junction box

Wire sensors point-to-point. For wiring at the analyzer end, refer to the appropriate analyzer wiring diagram.

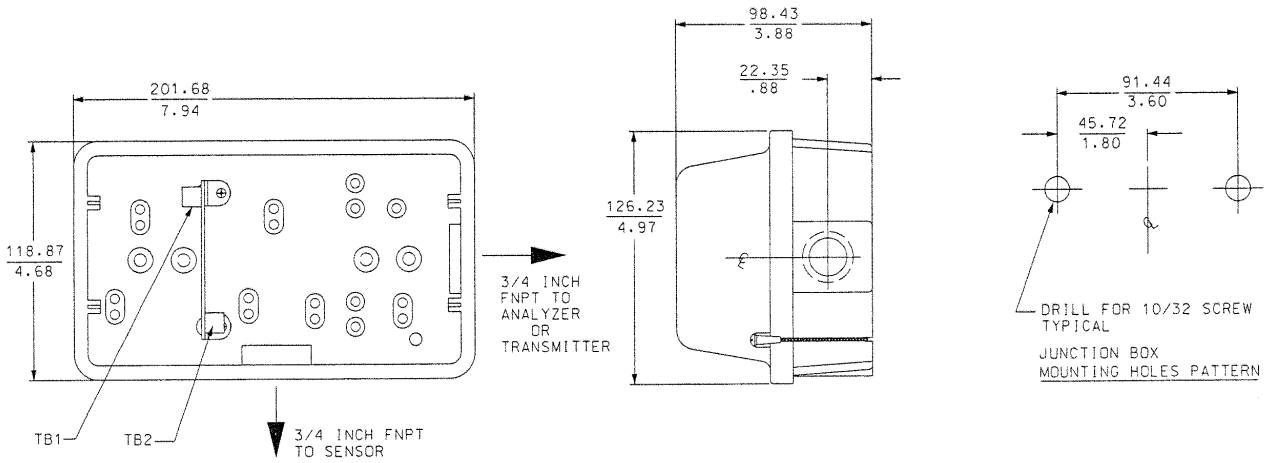

FIGURE 19. Remote Junction Box (PN 23550-00)

CALIBRATION

The nominal cell constant of the 225 sensor is 3/cm. The accuracy of the nominal constant is no more than about ±10%, so conductivity readings made using the nominal constant will have an error of at least ±10%. For higher accuracy, calibrate the sensor against a solution of known conductivity. A good source of information about how to prepare standards having relatively high conductivity is IEC Publication 746-3 "Expression of performance of electrochemical analyzers. Part 3: Electrolytic conductivity, Appendix B." Conductivity standards are also commercially available.

To do the calibration, submerge the sensor so that the top of the toroids are at least one inch (25 mm) below the surface of the standard solution. Keep at least one inch (25 mm) clearance between the sensor and the walls and bottom of the beaker. Allow adequate time for temperature equilibration before making the final reading. For more information, refer to the Calibration section of the analyzer manual.

The distance between the sensor and the walls of the pipe has a profound effect on the apparent cell constant of the sensor. See Figure 20. If the distance

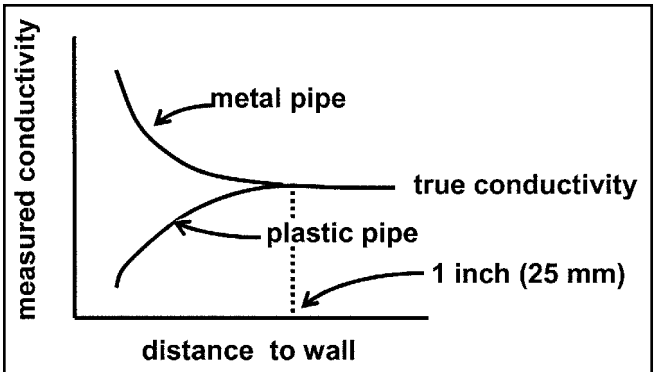

FIGURE 20. Measured conductivity as a function of clearance between sensor and walls

between the sensor and pipe walls is less than one inch (25 mm), the SENSOR MUST BE CALIBRATED IN PLACE against the results of a grab sample test.

Use a calibrated toroidal sensor to measure the conductivity of the grab sample. Submerge the sensor so that the top of the toroids are at least one inch (25 mm) below the surface of the standard solution. Be sure to maintain at least one inch (25 mm) clearance between the sensor and the walls and bottom of the beaker. Allow adequate time for temperature equilibration before making final readings. For more information, refer to the Calibration section of the analyzer manual.

MAINTENANCE

CAUTION

Be sure sensor has been cleaned of process liquid before handling.

Generally, the only maintenance required is to keep the opening of the sensor clear of deposits. Cleaning frequency is best determined by experience.

Most Rosemount Analytical analyzers and transmitters continuously monitor the sensor and analyzer for faults and display error messages if a problem is detected. Sensor related messages, for example, "Sensor Open", "Sensor Shorted", or "RTD Failure" can be caused by miswiring as well as by sensor failure. To check for sensor failure, measure the resistance between the lead wires as shown in Figure 21. Be sure to disconnect the leads from the analyzer before measuring.

The resistance between the temperature sensor leads depends on temperature.

Temperature	225-54 and 225-56	225-50
10°C	103.9 Ω	2802 Ω
20°C	107.8 Ω	2934 Ω
25°C	109.7 Ω	3000 Ω
30°C	111.7 Ω	3066 Ω
40°C	115.5 Ω	3198 Ω
50°C	119.4 Ω	3330 Ω

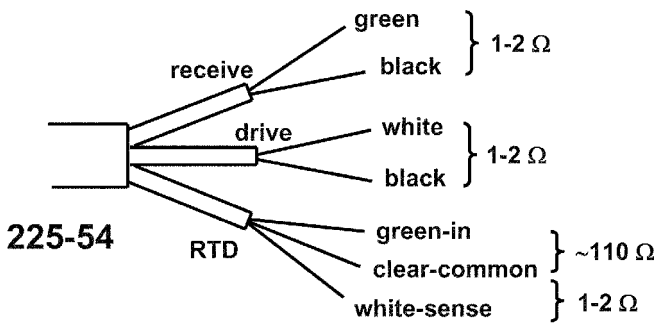

Resistance between shield and any other wire: >40 MΩ

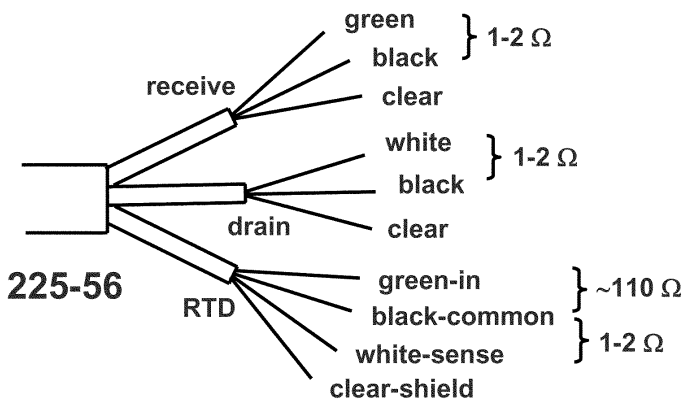

Resistance between shield and any other wire > 40MΩ

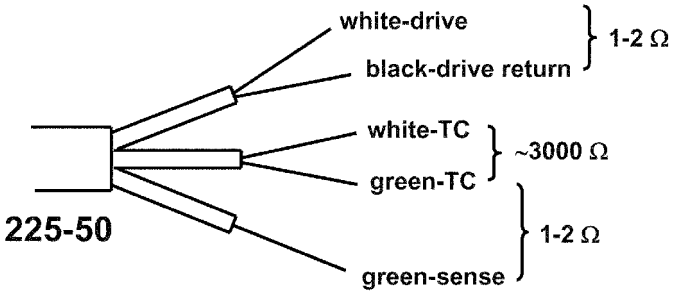

FIGURE 21. Resistance Check

Emerson Process Management

Liquid Division
2400 Barranca Parkway
Irvine, CA 92606 USA
Tel: (949) 757-8500
Fax: (949) 474-7250

http://www.raihome.com

EMERSON
Process Management