Now Offered With Remote Electronics!

In Situ Oxygen Transmitter

- Outstanding accuracy
- Electronics mounted to probe or separate
- Adaptable to any existing O_2 probe installation
- Advanced sensor diagnostics
  - alarm indicates when calibration is recommended
- Optional explosion-proof rating
  - EExd IIB + H2 ATEX
  - Class I, Div. I, Groups B, C and D
- Digital HART® communications (FOUNDATION™ fieldbus optional)
  - AMS/PlantWeb® compatible
- Fully field-repairable

Integral electronics and optional SPS Autocal Package

Remote electronics

THE LATEST BREAKTHROUGH FOR COMBUSTION FLUE GAS ANALYSIS

The Oxymitter 4000 In Situ Oxygen Transmitter was the world's first in situ, zirconium oxide-based oxygen transmitter for flue gas measurement. These oxygen measurements can be used in a control system or by a boiler operator to fine tune burner fuel/air ratios for maximum efficiency. Ideal for:

- boilers
- process heaters
- kilns
- reheat furnaces

Emerson Process Management is the leader in oxygen flue gas analyzer technology. Our in situ, zirconium oxide oxygen analyzers have long been established as industry standards. We've combined our expertise with the latest Rosemount transmitter technology to create a truly revolutionary package – the Oxymitter 4000.

The Oxymitter 4000 integrates an oxygen probe and field electronics into a single, compact package. The probe inserts directly into a flue gas duct to measure oxygen in combustion processes. No sampling system is required.

A NEMA 4X, IP 66 Rosemount transmitter housing mounts directly to the probe and contains the transmitter's electronics, replacing common stand-alone field electronics. This integrated design minimizes the costs of installing separate probe cable, conduit and electronics. The Oxymitter 4000's electronics also require 95% less power to operate. So, its components last longer.

The HART® protocol provides a link into Emerson Process Management's PlantWeb® field-based architecture. Instrument technicians can interface with the Oxymitter from the control room or any location where the transmitter's signal wires terminate. Service diagnostics and calibrations can be performed remotely with a HART handheld communicator or a personal computer equipped with AMS.

The Oxymitter 4000 is fully field-repairable. The probe's design provides convenient access to internal probe components so technicians can service the unit in house. The cell and heater/thermocouple are fully field-replaceable. The Oxymitter 4000 contains no potentiometer adjustments or jumpers.

The Oxymitter 4000 In Situ Oxygen Transmitter operates at process temperatures up to 1300°F (700°C), providing a fast response with high accuracy and reliability. Available lengths from 18 inches to 18 feet.

Optional accessories for the Oxymitter 4000 include:

- auto calibration gas sequencer
- remote, loop-powered LCD display of oxygen reading
- high temperature accessories for temperatures up to 1832°F (1000°C)
- flame arrestor
- abrasive shield

THE OXYMITTER 4000 OXYGEN TRANSMITTER IS COMPLETELY FIELD-REPAIRABLE

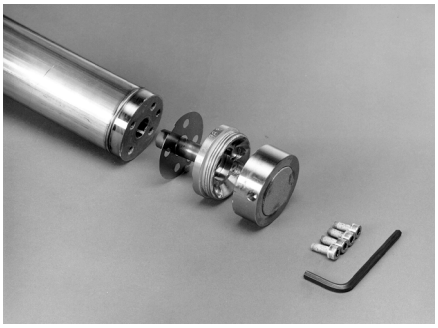

Diffusion Filter and Sensor Cell Assembly

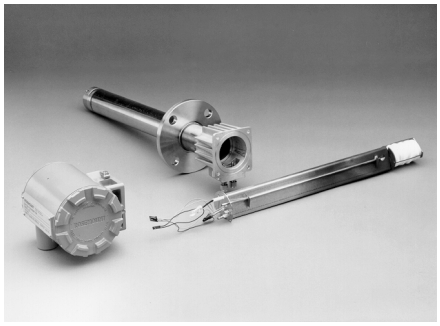

Heater/Thermocouple Assembly

- Outstanding accuracy– + or - .75% of reading or .05% O_2
- Special cells for tough service in SO_2 and HCL
- Rugged steel cell holder – cells will not crack

General Purpose – OXT4A

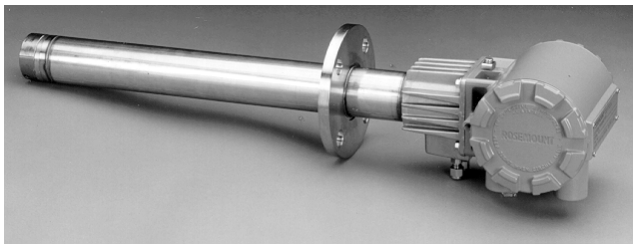

- Lengths from 18” (.9m) to 18’ (5.5m)
  - ANSI, DIN, JIS and special flanges (1.8m) (5.5m)
  - Flat-faced (snubber), Hastelloy and Ceramic Diffusers

Hazardous Area – OXT4C

- ATEX EExd IIB + H2 T2
- CSA/FM Class I, Div. I, Groups B, C and D
- Lengths from 18” (.9m) to 6’

Electronics

- -40°F to 185°F(-40°C to 85°C) temperature limit
- HART or FOUNDATION fieldbus communications
- “Calibration Recommended” diagnostic

Integral to Probe

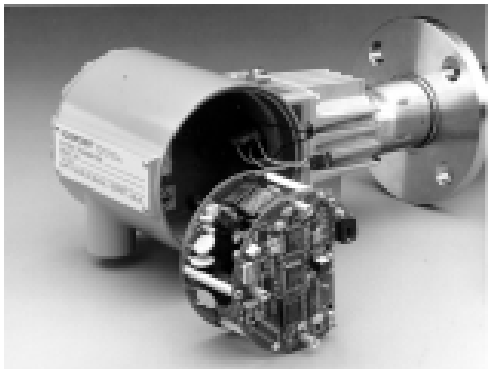

- Lowest cost of installation
- No cable or conduit between probe and electronics
- No separate electronics to mount

Remote Mounted

- Probe to electronics cable lengths to 200 feet
- Bright gas fluorescent local operator interface (LOI)
- Thru-glass infrared pushbuttons (LOI also available on integral electronics version)

DIGITAL COMMUNICATIONS

Communicate with the Oxymitter 4000 from almost anywhere via the HART Protocol

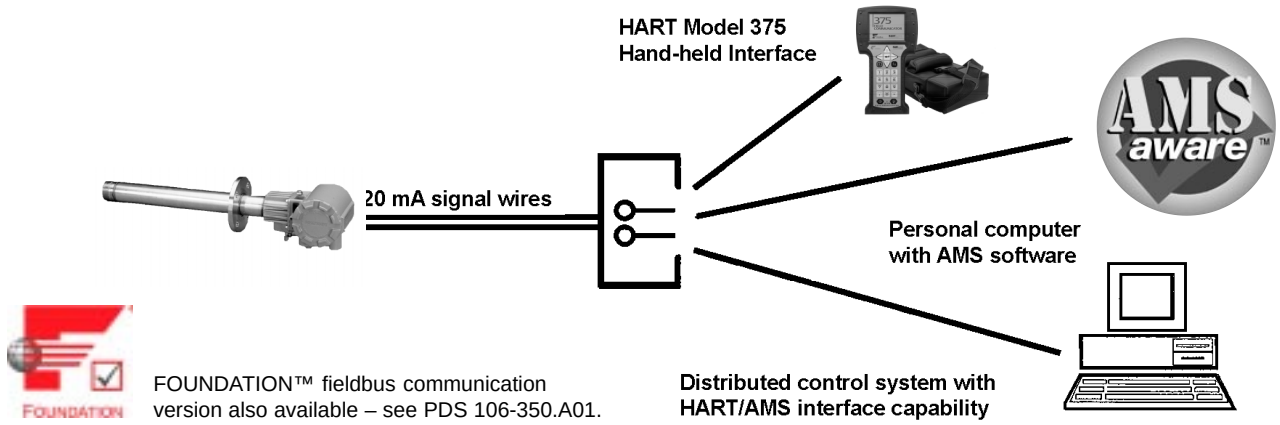

AUTOMATIC CALIBRATION OPTIONS

Plant personnel often ask how often an oxygen analyzer requires calibration. The answer is very application-dependent, based upon the fuels being burned, normal levels of oxygen and the sulfur content in the flue gases. The Oxymitter 4000 addresses this concern by providing an on-line diagnostic that determines when a calibration should be conducted. The Oxymitter electronics initiate an on-line impedance measurement of the sensing cell once every hour, which directly correlates to cell accuracy. This feature can trigger a fully automatic calibration via the SPS 4000, ensuring that the analyzer is always accurate. Also, many needless calibrations based on "time in service" are eliminated.

A contact closure notifies the control room when a calibration is taking place. The oxygen output signal can be held at its last value, or released during calibration. The Oxymitter can also initiate calibrations by traditional methods:

- Contact closure from the user's control room
- Time since last calibration feature – established by the autocalibration system
- Oxymitter 4000 has a button on the front panel of the electronics to initiate calibration
- HART communications or Asset Management Solution

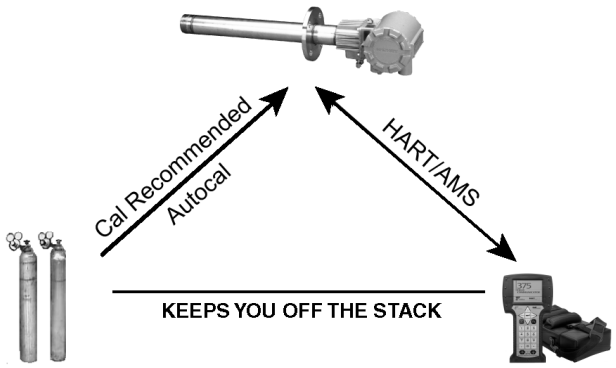

OXYMITTER 4000 AUTOCALIBRATION SYSTEM INSTALLATION OPTIONS (For details, see Product Data Sheet 106-340AC)

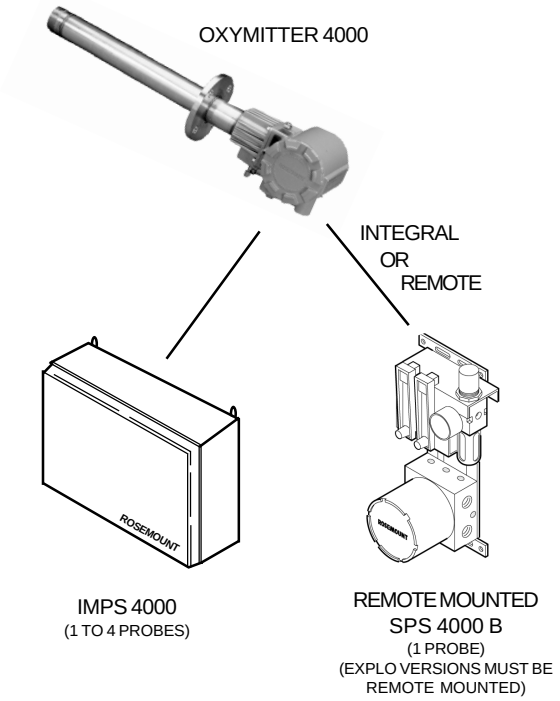

SPECIFICATIONS [1]

OXYMITTER 4000 OXYGEN TRANSMITTER

Net O_2 Range 0-10%, 0-40% variable O_2

Accuracy: Typically ±0.75% of reading or 0.05% O_2, whichever is greater
Lowest detectable limit – .05% O_2

System Response to Test Gas:
Initial response in less than 3 seconds
T_{90} in less than 8 seconds

Temperature Limits:

Process: 32° to 1300°F (0° to 704°C) up to 1832°F (1000°C) with optional accessories

Electronics: -40° to 185°F (-40° to 85°C)
Operating temperature of electronics inside of instrument housing, as measured by a HART® communicator or AMS software.

Local operator interface:
-40° to 185°F (-40° to 85°C)

IR thru-glass pushbuttons:
-40° to 158°F (-40° to 70°C)

Probe Lengths, Nominal and Approximate Shipping Weights:

18 in. (457 mm) package:	16 pounds (7.3 kg)
3 foot (0.91 m) package:	21 pounds (9.5 kg)
6 foot (1.83 m) package:	27 pounds (12.2 kg)
9 foot (2.74 m) package:	33 pounds (15.0 kg)
12 foot (3.66 m) package:	39 pounds (17.7 kg)
15 foot (4.6 m) package:	45 pounds (20.5 kg)
18 foot (5.5 m) package:	51 pounds (23 kg)

Mounting and Mounting Position:
Vertical or horizontal
Spool pieces are available, P/N 3D39761G02, to offset transmitter housing from hot duct work.

Materials:

Probe: Wetted or welded parts – 316L stainless steel

Non-wetted parts – 304 stainless steel, low-copper aluminum

Electronics Enclosure: Low-copper aluminum

Calibration: Semi-automatic or automatic

Calibration Gas Mixtures Recommended: 0.4% O_2, balance N_2, 8% O_2, balance N_2 (Ref. test gas kit #6296A27G01)

Calibration Gas Flow: 5 scfh (2.5 l/m)

Reference Air (optional): 2 scfh (1 l/m), clean, dry, instrument-quality air (20.95% O_2), regulated to 5 psi (34 kPa)

Electronics: NEMA 4X, IP 66 with fitting and pipe on reference exhaust port to clean dry atmosphere

Electrical Noise: Meets EN 55082 Generic Emissions Standard
EN 61000-4-2 Electrostatic Discharge
EN 61000-4-3 Radio Frequency Interference
EN 61000-4-6 Radio Frequency Interference
EN 61000-4-4 Fast Transient Immunity

C US

Emerson Process Management has satisfied all obligations coming from the European legislation to harmonize the product requirements in Europe.

Optional

Hazardous Area Certifications

a. Hazardous Area Oxymitter 4000 with Integral Electronics

KEMA/ATEX	II 2 G EEx d IIB+H_2 T6 (Elect Comp) / T2 (Probe)
CSA	Class I, Division 1, Groups B, C, D T2 Class I, Zone 1, Ex d IIB+H_2 T2 Class I, Zone 1, AEx d IIB+H_2 T2
FM	Class I, Division 1, Groups B, C, D T2 Class I, Zone 1, AEx d IIB+H_2 T2

b. Hazardous Area Oxymitter 4000 with Remote Electronics

KEMA/ATEX	II 2 G EEx d IIB+H_2 T2 (Remote Probe) II 2 G EEx de IIB+H_2 T6 (Remote Electronics)
CSA	Class I, Zone 1, Ex d IIB+H_2 T2 (Remote Probe) Class I, Zone 1, Ex de IIB+H_2 T6 (Remote Electronics) Class I, Zone 1, AEx d IIB+H_2 T2 Remote Probe) Class I, Zone 1, AEx de IIB+H_2 T6 (Remote Electronics)
FM	Class I, Zone 1, AEx d IIB+H_2 T2 (Remote Probe) Class I, Zone 1, AEx de IIB+H_2 T6 (Remote Electronics)

Line Voltage: Universal 90 to 250 VAC, 48 to 62 Hz. no switches or jumpers required 3/4" – 14 NPT conduit port

Analog Output/ Hart: One 4-20mAdc, 950 ohm maximum load isolated with Hart capability or digital FOUNDATION fieldbus signal

2 Terminal Logic Contact: Configurable as either an alarm output or as a bi-directional calibration handshake signal to calibration gas sequencer. Self-powered, (+5V) 340 ohm series resistance

3/4"–14 NPT (one threaded hole for both analog output and logic I/O)

Power Consumption Limits:

Power Consumption of Probe Heater: 175 W nominal maximum

Power Consumption of Electronics: 10 W nominal maximum

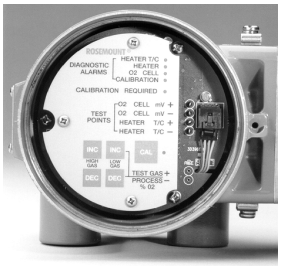

The Oxymitter 4000's field electronics mount directly to the oxygen probe in a standard NEMA 4X, IP 66 housing.

[1] All static performance characteristics are with operating variables constant. Specifications subject to change without notice.

OUTLINE DIMENSIONS FOR OXYMITTER 4000 OXYGEN TRANSMITTER FOR GENERAL PURPOSE APPLICATIONS

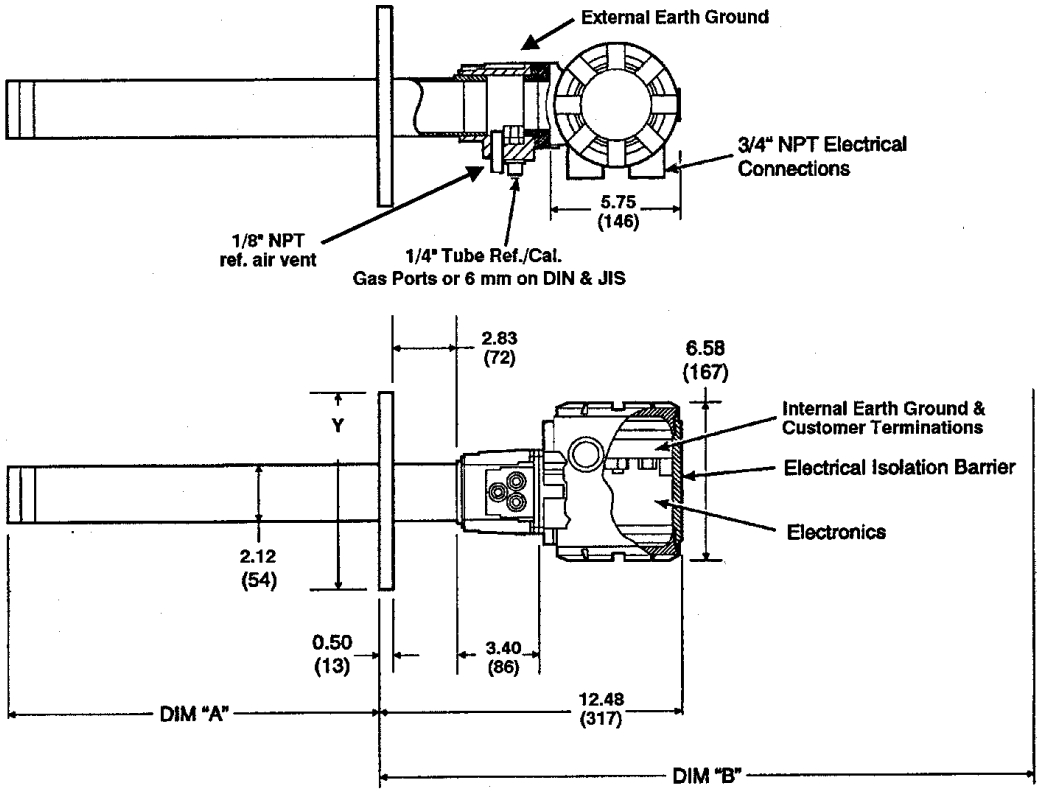

Note: All dimensions are in inches with millimeters in parentheses.

Adapter Plate Outline

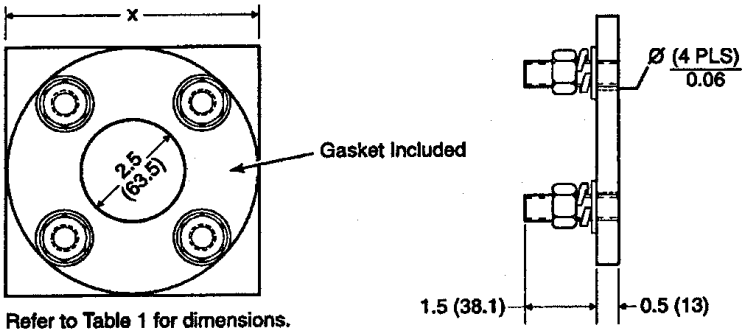

Refer to Table 1 for dimensions.

Table I. Mounting Plate

	Dimensions Dia. in. (mm)		
	ANSI	**DIN**	**JIS**
Mtg. Plate (x)	6.0 (153)	7.5 (190)	6.5 (165)
Stud Size	5/8" – 11	M16 x 2	M12 x 1.75
4 Studs Eq. Sp. on BC	4.75 BC (121) BC	5.71 BC (145) BC	5.12BC (130) BC
Flange (Y)	6.0 (153)	7.3 (185)	6.1 (155)

Table II. Removal/Installation

Probe Length	**Dim "A" Insertion Depth**	**Dim. "B" Removal Envelope**
18 in. (457 mm) Probes	16.00 (407)	28.6 (725)
3 ft. (0.91 m) Probes	34.00 (864)	46.6 (1182)
6 ft. (1.83 m) Probes	70.00 (1778)	82.6 (2097)
9 ft. (0.91 m) Probes	106.00 (2692)	118.6 (3011)
12 ft. (3.66 m) Probes	142.00 (3607)	154.6 (3926)

ORDERING INFORMATION

Model	Description
OXT4A	In Situ Oxygen Transmitter – HART Smart (Oxymitter 4000)

Level 1	Sensing Probe Type
1	Ceramic diffusion element probe (ANSI)
2	Flame arrestor probe (ANSI) (ceramic diffusion element)
3	Snubber diffusion element (ANSI)
4	Ceramic diffusion element probe (DIN)
5	Flame arrestor probe (DIN) (snubber diffusion element)
6	Snubber diffusion element (DIN)
7	Ceramic diffusion element probe (JIS)
8	Flame arrestor probe (JIS) (ceramic diffusion element)
9	Snubber diffusion element (JIS)

Level 2	Probe Assembly
0	18 in. (457 mm) probe
1	18 in. (457 mm) probe with abrasive shield [1]
2	3 ft. (0.91 m) probe
3	3 ft. (0.91 m) probe with abrasive shield [1]
4	6 ft. (1.83 m) probe
5	6 ft. (1.83 m) probe with abrasive shield [1]
6	9 ft. (2.74 m) probe
7	9 ft. (2.74 m) probe with abrasive shield [1]
8	12 ft. (3.66 m) probe
9	12 ft. (3.66 m) probe with abrasive shield [1]
A	15 ft. (4.57 m) probe with abrasive shield [1]
B	18 ft. (5.49 m) probe with abrasive shield [1]

Level 3	Mounting Hardware (stack side)
0	No mounting hardware (must be chosen under mounting adapter – probe side)
1	New Installation – square weld plate with studs
2	Mounting to Model 218 mounting plate (with Model 218 shield removed)
3	Mounting to existing Model 218 support shield
4	Mounting to other mounting [2]
5	Mounting to Model 132 adapter plate

Level 4	Mounting Hardware (probe side)
0	No mounting hardware
1	Probe only (ANSI)
2	New bypass or new abrasive shield (ANSI)
4	Probe only (DIN)
5	New bypass or new abrasive shield (DIN)
7	Probe only (JIS)
8	New bypass or new abrasive shield (JIS)

Level 5	Electronic Housing and Filtered Customer Termination – NEMA 4X, IP 66
11	Electronics integrally mounted to probe with standard filtered termination
12	For HART® electronics integrally mounted to probe with transient protected filtered termination
13	Electronics mounted remotely with standard filtered termination; requires cable
14	For HART® electronics mounted remotely with transient protected filtered termination – requires cable

Level 6	Communications
1	Membrane keypad – HART capable, blind cover
2	Membrane keypad – HART capable, glass cover
3	Gas florescent LOI HART capable, glass cover, English only

ORDERING INFORMATION (continued)

Level 7	Language	LOI Accepts English Language Only
	1	English
	2	German
	3	French
	4	Spanish
	5	Italian

Level 8	Termination Filtering	
	00	Specified as part of electronic housing

Level 9	Calibration Accessories	
	00	No hardware
	01	Cal/ref. flowmeter and ref pressure regulator
	02	IMPS 4000 refer to IMPS table 2
	03	SPS 4001B, order PN 6A00142G01

Level 10	Electronics to Probe Cable	
	00	No cable
	10	20 ft. (6 m) cable
	11	40 ft. (12 m) cable
	12	60 ft. (18 m) cable
	13	80 ft. (24 m) cable
	14	100 ft. (30 m) cable
	15	150 ft. (45 m) cable
	16	200 ft. (61 m) cable

Note:

[1] Recommended usages: high velocity particulates in flue stream, installation within 10 ft. (3.5 m) of soot blowers or heavy salt cake build-up. Applications: pulverized coal, recovery boilers, lime kiln. Regardless of application, abrasive shields with support brackets are recommended for 9 ft. and 12 ft. probe installations, particularly horizontal installations.

[2] Where possible, specify SPS number; otherwise provide details of existing mounting plate as follows:

Plate with studs	Bolt circle diameter, number and arrangement of studs, stud thread, stud height above mounting plate.
Plate without studs	Bolt circle diameter, number and arrangement of holes, thread, depth of stud mounting plate with accessories.

CALIBRATION GAS BOTTLES [1]

Part Number	Description
1A99119G01	Two disposable gas bottles – .4% and 8% O_2 balance nitrogen 550 liters each
1A99119G02	Two pressure regulators for cal gas bottles
1A99119G03	Bottle rack

[1] Bottles cannot be shipped via airfreight.

LIST PART NUMBERS AS SEPARATE LINE ITEMS:

The Intelligent Multiprobe Sequencer (IMPS) will automatically calibrate up to 4 probes.

Part Number	Description	Number of Probes
3D39695G01	Intelligent multiprobe sequencer (IMPS)	1
3D39695G02	Intelligent multiprobe sequencer (IMPS)	2
3D39695G03	Intelligent multiprobe sequencer (IMPS)	3
3D39695G04	Intelligent multiprobe sequencer (IMPS)	4
3D39695G05	Intelligent multiprobe sequencer (IMPS) w/115 V heater	1
3D39695G06	Intelligent multiprobe sequencer (IMPS) w/115 V heater	2
3D39695G07	Intelligent multiprobe sequencer (IMPS) w/115 V heater	3
3D39695G08	Intelligent multiprobe sequencer (IMPS) w/115 V heater	4
3D39695G09	Intelligent multiprobe sequencer (IMPS) w/120 V heater	1
3D39695G10	Intelligent multiprobe sequencer (IMPS) w/120 V heater	2
3D39695G11	Intelligent multiprobe sequencer (IMPS) w/120 V heater	3
3D39695G12	Intelligent multiprobe sequencer (IMPS) w/120 V heater	4

Rosemount Analytical no longer offers an integral Z-purge option for its oxygen (O_2) analyzers. However, the IFT, MPS and IMPS enclosures are still capable of Z or X purge by the customer.

OUTLINE DIMENSIONS FOR OXYMITTER 4000 HAZARDOUS AREA OXYGEN TRANSMITTER

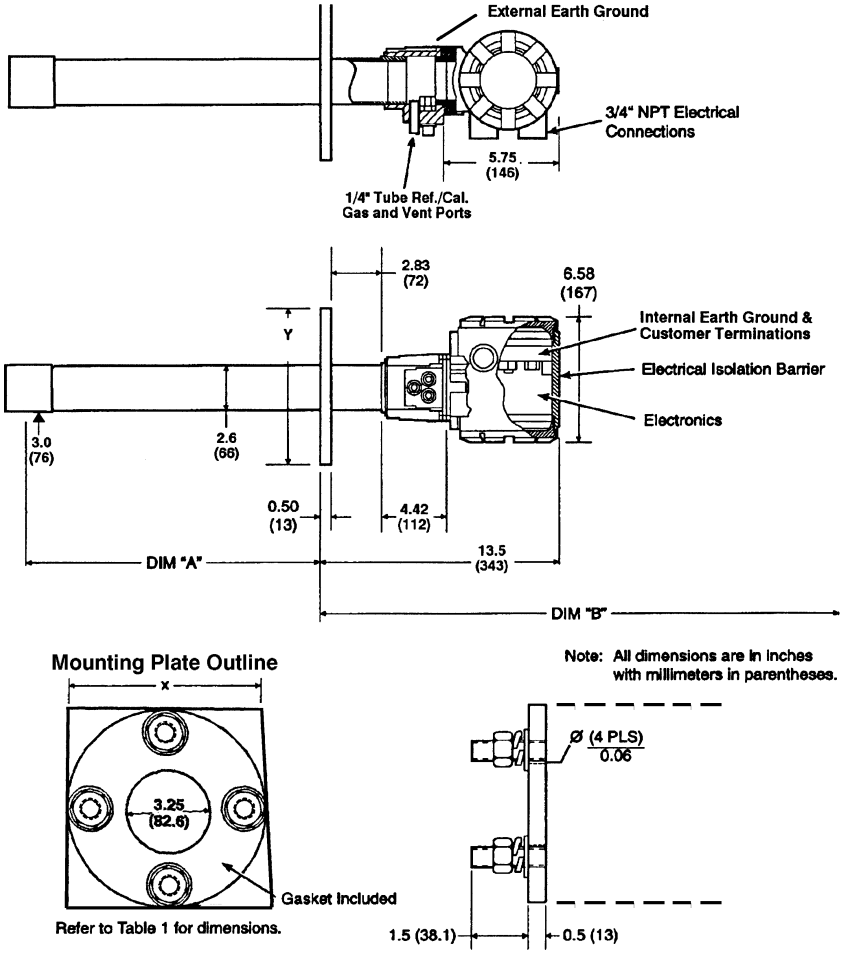

Table I. Mounting Plate		
	Dimensions Dia. in. (mm)	
	ANSI	DIN
Mtg. Plate (x)	7.75 (197)	8.5 (215)
Stud Size	5/8" – 11	M16 x 2
4 Studs Eq. Sp. on BC	6.00 BC (152.4) BC	6.70 BC (170) BC
Flange (Y)	7.5 (190)	8.27 (210)

Table II. Removal/Installation		
Probe Length	Dim "A" Insertion Depth	Dim. "B" Removal Envelope
18 in. (457 mm) Probes	18.1 (460)	31.6 (803)
3 ft. (0.91 m) Probes	36.1 (917)	57.0 (1448)
6 ft. (1.83 m) Probes	72.1 (1831)	85.6 (2174)

ORDERING INFORMATION

Model	Description
OXT4C	In Situ Oxygen Transmitter – Explo-Proof – HART Smart (Oxymitter 4000)

Level 1	Sensing Probe Type With Flame Arrestor
1	Ceramic diffusion element probe (ANSI 3” 150 lb. bolt circle)
2	Snubber diffusion element (ANSI 3” 150 lb. bolt circle)
3	Ceramic diffusion element probe (DIN 2527) 1/4” tube fittings
4	Snubber diffusion element (DIN 2527) 1/4” tube fittings
5	Ceramic diffusion element probe (JIS)
6	Snubber diffusion element (JIS)
7	Ceramic diffusion element probe (ANSI 3” 300 lb. bolt circle) [1]
8	Ceramic diffusion element probe (ANSI 4” 300 lb. bolt circle) [1]

Level 2	Probe Assembly
0	18 in. probe
1	18 in. probe with 3 ft. bypass
2	18 in. probe with abrasive shield [2]
3	3 ft. probe
4	3 ft. probe with abrasive shield [2]
5	6 ft. probe
6	6 ft. probe with abrasive shield [2]

Level 3	Mounting Adapter (stack side)
0	No adapter plate (0 must also be chosen under mounting adapter – probe side)
1	New Installation – square weld plate with studs
2	Model 218 mounting plate (with Model 218 shield removed)
3	Competitor’s mount [2]

Level 4	Mounting Adapter (probe side)
0	No adapter plate
1	Probe only (ANSI)
2	New bypass or new abrasive shield (ANSI)
4	Probe only (DIN)
5	New bypass or new abrasive shield (DIN)
7	Probe only (JIS)
8	New bypass or new abrasive shield (JIS)

Level 5	Electronic Housing and Filtered Customer Termination – NEMA 4X, IP 66
11	Electronics, mounted integral to probe, standard filtered termination, ATEX EEx d IIB + H2 T2 certification
12	HART® electronics, mounted integral to probe, transient protected termination, ATEX EEx d IIB + H2 T2 certification
13	Electronics, mounted remotely, standard filtered termination, requires cable ATEX EEx d IIB + H2 T2 certification
14	HART® electronics, mounted remotely with transient protected termination, requires cable ATEX EEx d IIB + H2 T2 certification
21	Electronics, mounted integral to probe, standard filtered termination, CSA/FM Class I, Div. I, Groups B, C and D
22	HART® electronics, mounted integral to probe, transient protected termination, CSA/FM Class I, Zone I, Groups B, C and D
23	Electronics, mounted remotely, standard filtered termination; requires cable CSA/FM Class I, Zone I, Groups B, C and D
24	HART® electronics, mounted remotely, transient protected termination; requires cable CSA/FM Class I, Div. I, Groups B, C and D

Level 6	Communications
1	Membrane keypad – HART capable
2	Membrane keypad – HART capable, glass window
3	Gas florescent LOI HART capable, glass window, English only

ORDERING INFORMATION (continued)

Level 7	Language	LOI Accepts English Language Only
	1	English
	2	German
	3	French
	4	Spanish
	5	Italian

Level 8	Termination Filtering	
	00	Specified as part of electronic housing

Level 9	Calibration Accessories	
	00	No hardware
	01	Cal/ref flowmeter and ref pressure regulator
	02	IMPS 4000 (safe area only) refer to table 1
	03	SPS 4001B remote mounted (safe area or 2-purgable) PN - 6A00142G01

Level 10	Electronics to Probe Cable	
	00	No cable
	10	20 ft. (6 m) cable
	11	40 ft. (12 m) cable
	12	60 ft. (18 m) cable
	13	80 ft. (24 m) cable
	14	100 ft. (30 m) cable
	15	150 ft. (45 m) cable
	16	200 ft. (61 m) cable

NOTES:

[1] Probe is set up for high acid service in catalytic regenerators; includes: SO_2/ HCL resistant cell, Hastelloy C and Viton materials for calibration gas line larger than standard flange. Acid service cells are available for other probes ordered separately.

[2] Recommended usages: high velocity particilates in flue stream, installation within 10 ft. (3.5 m) of soot blowers or heavy salt cake build-up. Applications: pulverized coal, recovery boilers, lime kiln. Regardless of application, abrasive shields with support brackets are recommended for 9 ft. (2.74 m) and 12 ft. (3.65 m) probe installations, particularly horizontal installations.

[3] Where possible, specify SPS number; otherwise provide details of the existing mounting plate as follows:

Plate with studs	Bolt circle diameter, number and arrangement of studs, stud thread, stud height above mounting plate.
Plate without studs	Bolt circle diameter, number and arrangement of holes, thread, depth of stud mounting plate with accessories.

CALIBRATION GAS BOTTLES [1]

Part Number	Description
1A99119G01	Two disposable gas bottles – .4% and 8% O_2 balance nitrogen 550 liters each
1A99119G02	Two pressure regulators for cal gas bottles
1A99119G03	Bottle rack

[1] Bottles cannot be shipped via airfreight.

LIST PART NUMBERS AS SEPARATE LINE ITEMS:
The Intelligent Multiprobe Sequencer (IMPS) will automatically calibrate up to 4 probes.

Part Number	Description	Number of Probes
3D39695G01	Intelligent multiprobe sequencer (IMPS)	1
3D39695G02	Intelligent multiprobe sequencer (IMPS)	2
3D39695G03	Intelligent multiprobe sequencer (IMPS)	3
3D39695G04	Intelligent multiprobe sequencer (IMPS)	4
3D39695G05	Intelligent multiprobe sequencer (IMPS) w/115V heater	1
3D39695G06	Intelligent multiprobe sequencer (IMPS) w/115V heater	2
3D39695G07	Intelligent multiprobe sequencer (IMPS) w/115V heater	3
3D39695G08	Intelligent multiprobe sequencer (IMPS) w/115V heater	4
3D39695G09	Intelligent multiprobe sequencer (IMPS) w/115V heater	1
3D39695G10	Intelligent multiprobe sequencer (IMPS) w/115V heater	2
3D39695G11	Intelligent multiprobe sequencer (IMPS) w/115V heater	3
3D39695G12	Intelligent multiprobe sequencer (IMPS) w/115V heater	4

Rosemount Analytical no longer offers an integral Z-purge option for its oxygen (O_2) analyzers. However, the IFT, MPS and IMPS enclosures are still capable of Z or X purge by the customer.

OXYMITTER 4000 ACCESSORIES

HART® Hand-held 375 Communicator

The HART® 375 Communicator is an interface device that provides a common communication link to HART® compatible instruments, such as the Sulfur-Resistant Oxymitter 4000. HART® Communications Protocol permits all the information available from the Sulfur-Resistant Oxymitter 4000's electronics to be transmitted over standard 4-20 mA signal wires. By attaching the HART handheld communicator at a termination point along the 4-20 mA signal line, a technician can diagnose problems and configure and calibrate the Sulfur-Resistant Oxymitter 4000 as if he or she were standing in front of the instrument.

For more information, call Rosemount Analytical at 1-800-433-6076.

Bypass Packages

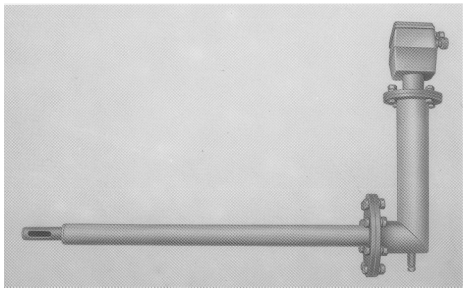

The specially designed Rosemount Analytical Bypass Package for oxygen analyzers has proven to withstand the high temperatures in process heaters while providing the same advantages offered by the in situ sensor. Inconel tubes provide effective resistance to corrosion, and the other components common to other sampling systems.

For more information, call Rosemount Analytical at 1-800-433-6076.

O_2 Calibration Gas Kits

Rosemount Analytical's O_2 Calibration Gas and Service Kits have been carefully designed to provide a more convenient and fully portable means of testing, calibrating, and servicing Rosemount Analytical's oxygen analyzers. These lightweight, disposable gas cylinders eliminate the need to rent gas bottles.

For more information, call Rosemount Analytical at 1-800-433-6076.

SPECIAL ARRANGEMENTS

Special Cells for High Acid Service

Many combustion processes use fluels that contain sulfur of HCI. Special cells provide extended life in these difficult applications.

Kiln Applications

An in situ O_2 probe can reach into the kiln past the rotating seal, eliminating the effect of the tramp air leaking through the rotating seals. O_2 and NO_X levels are closely related, providing a good indication of Calcining rate. Probes are offered in lengths of up to 18 ft. Probes can be operated to 1500°F with only an outer abrasive shield and to 2000°F with optional cooling jackets (6 ft. length limit.) See Application Data Sheet ADS 106-300F.A01.

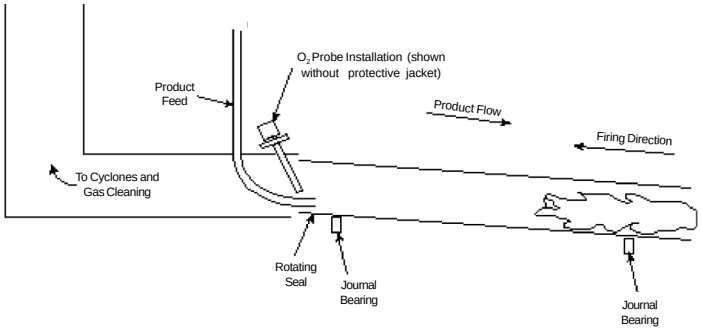

Proper installation of an O_2 probe in a rotating cement kiln

Catalyst Regeneration

Measure O_2 in regenerators at pressures up to 50 psi. In situ design resists plugging due to catalyst fines Class I, Div. I, Group B, C and D. Optional pressure balancing arrangement. Optional isolation valving system permits installation and withdrawal while the process is running. Specified by UOP. See Application Data Sheet ADS 106-300F.A01.

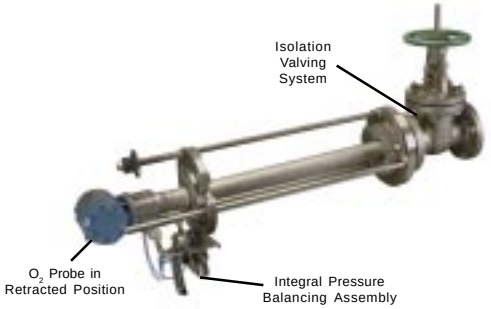

Pressure balanced in situ O_2 probe with optional isolation valving system (probe withdrawn)

The contents of this publication are presented for informational purposes only, and while every effort has been made to ensure their accuracy, they are not to be construed as warranties or guarantees, express or implied, regarding the products or services described herein or their use or applicability. All sales are governed by our terms and conditions, which are available on request. We reserve the right to modify or improve the designs or specifications of our products at any time without notice.

Emerson Process Management

Rosemount Analytical Inc.
Process Analytic Division
1201 North Main Street
Orrville, OH 44667-0901 USA
T 330.682.9010
Toll Free in US and Canada 800.433.6076
F 330.684.4434
e-mail: gas.csc@EmersonProcess.com
www.raihome.com

© Rosemount Analytical Inc., 2004. All rights reserved.
Printed in U.S.A. on recycled paper. ♻

EMERSON™
Process Management