A2C / A2C-2000
CALIBRATOR

INSTRUCTION MANUAL

CONTENTS

PLEASE, READ THIS FIRST

- Check the product for any physical damage that may have occurred during shipment. We carefully pack and routinely insure all shipments. If any damage has occurred, it is your responsibility to file a claim with the carrier, **prior to returning the damaged product**. Please note that our warranty does not cover damage during shipment.

- Prior to installation, get fully familiarized with the operating limits of the probe and with the measurement tips provided in this manual.

Each ROTRONIC instrument is carefully calibrated before shipment. No further adjustments should be required before installation. If you have any question or problem, please call our service department at 631/427-3898 (press 5 or ask for extension 21).

DESCRIPTION

The A2C calibrator is a battery operated indicator that permits doing a one-point calibration of a Rotronic humidity-temperature transmitter without interruption of signal transmission. The A2C-2000 is similar to the A2C and should be used with I-2000 series transmitters.

The A2C has two modes of operation:

(a) Display the relative humidity and temperature measured with a Rotronic probe connected to the A2C (reference). Both parameters are simultaneously shown on the LC display.
(b) Read and display the output signals (temperature and humidity) of a transmitter.

Operation in one or the other mode is determined by the position of a toggle switch. A one-point calibration of the transmitter can be done by adjusting the signals of the transmitter to match the readings of the probe (reference) connected to the A2C.

Each A2C is factory configured to match a specific model of humidity-temperature transmitter with specific output signals and output ranges (see the label on the indicator). The A2C cannot be used with transmitters having different specifications without being reconfigured.

The A2C-2000 can be used with any transmitter of the I-2000 series, regardless of the range and type of output signals.

REFERENCE PROBE

The A2C calibrator can operate with any Rotronic humidity and temperature probe. Connect the probe to the 5-pin BINDER connector located at the top right hand side of the calibrator.

OPERATION

A label located on the back of the instrument case provides the factory settings of the A2C (the A2C will operate properly only with a transmitter having compatible output signals).

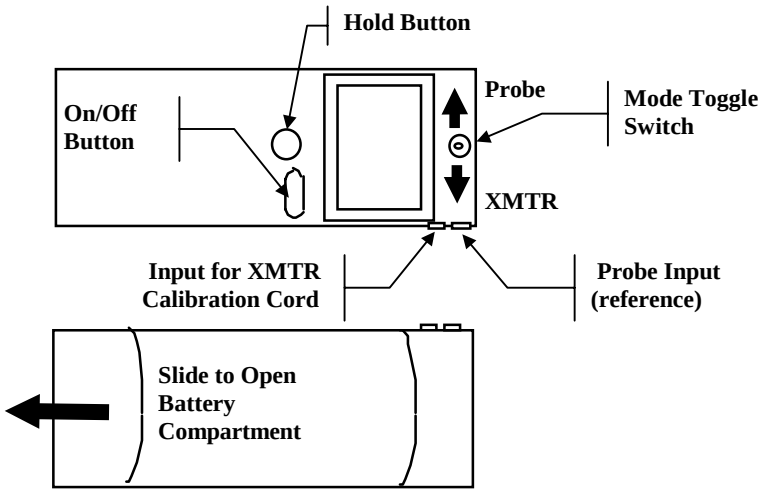

Measure Mode

Move the switch located at the front of the A2C the left (position **Probe**).

Connect a Rotronic probe (reference) to the probe input of the A2C. Press on the blue push button to turn the instrument on. The instrument is ready for use after a warm up time of about 1 second (3 seconds if using the HPH probe). The LC display shows both the value of relative humidity (%RH) and that of temperature (°F or °C as specified at the time of the order). After about 2 minutes, the instrument is automatically powered off to conserve the battery.

Keeping the red push button (HOLD) pressed down freezes the display. To conserve battery power, the instrument powers off automatically if no push button is pressed for 2 minutes. The display indicates LOW BAT when the battery voltage is too low for proper operation..

Read Mode

The A2C comes with a calibration cord that is used to connect the A2C with the transmitter to be calibrated.

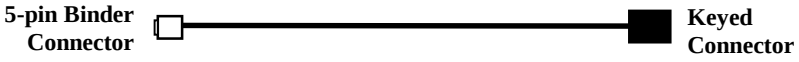

Test Cord AK3029-B for A2C/ A2C-2000 Calibrator

Connect the 5-pin Binder connector to the A2C, and the keyed connector to the transmitter, as indicated below. Move the switch located at the front of the A2C to the right (position **XMTR**). Turn the A2C on and allow a few seconds for stabilization.

a) F and F65 Series Transmitters

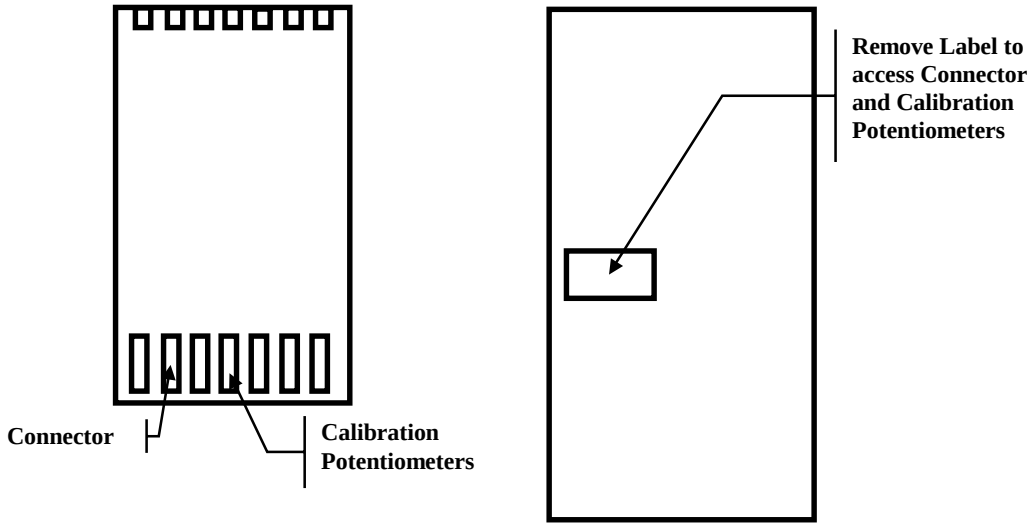

b) 200 Series Transmitters and TM12 (open enclosure for access)

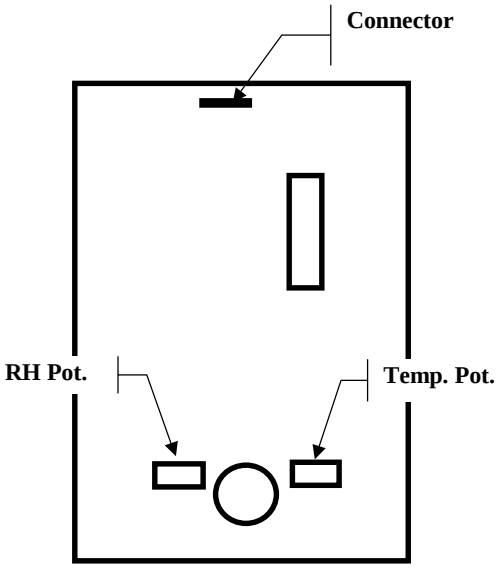

c) I-2000 Series Transmitters (open enclosure for access)

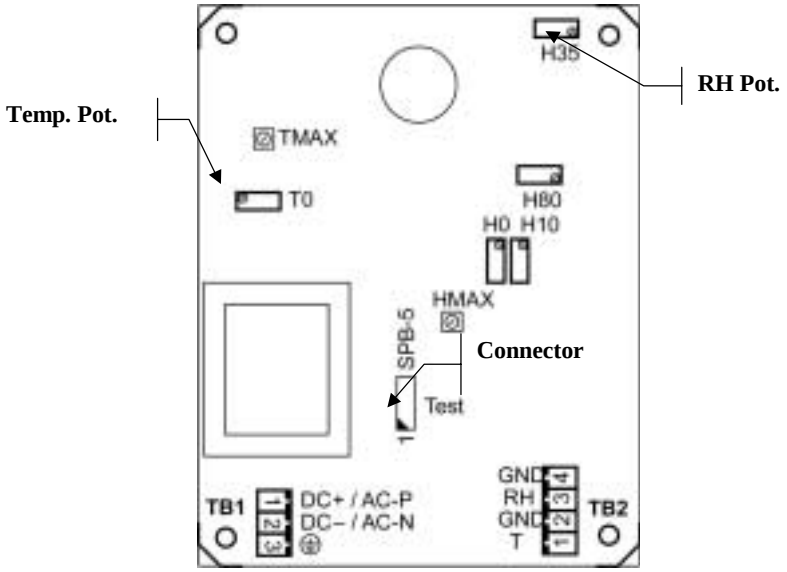

MEASUREMENT AND CALIBRATION

It is important to note that the one-point calibration method is useful only in applications where humidity and temperature conditions are both stable and uniform (such as a clean room). In most applications, a 1-point adjustment can produce significant errors and a minimum of two calibration values is usually required to obtain accurate results.

There is no such thing as an instantaneous humidity and temperature measurement. By nature, measurements require that the reference probe be given sufficient time to equilibrate with the environment to be measured. Calibration against a reference probe should always be done in a stable environment.

A common source of error is a difference between the temperature of the probe and the temperature of the environment. At average and high humidity levels, even a small difference such as 1or 2°F results in a substantial error on relative humidity.

To avoid errors, follow these guidelines when calibrating a transmitter:

- Provide Air Movement at the Sensors

Still air is an excellent temperature insulator and also slows down the equilibration of humidity. Calibrations in still air are generally unreliable. To be certain that the reference probe and the transmitter are both exposed to the same conditions, they should be subjected to the same air flow.

• Note the Initial Temperature Difference

The larger the initial temperature difference between the reference probe and the transmitter, the more time you should allow for both instruments to agree with one another. When the reference probe is inserted in a hot environment, condensation will occur on the sensors when the dew point of the environment is higher than the temperature of the probe. When the probe is being used within its temperature limits, condensation will not alter the calibration of the humidity sensor. However, the sensor will have to dry before it can provide a valid measurement.

• Monitor the Stability of Temperature

You should always monitor the stability of the temperature display when measuring or when calibrating relative humidity.

Calibrating a transmitter is done by alternatively displaying the measurements provided by the reference probe and the signals provided by the transmitter. When both readings are stable, the transmitter can be adjusted to match the reference probe.

IMPORTANT: always adjust the temperature of the Rotronic transmitter prior to adjusting humidity.

For a one-point calibration of a transmitter, use the Tmin potentiometer to adjust temperature and the 35% (H35) potentiometer to adjust humidity.

SPECIFICATIONS

Operation	9 V Alkaline Battery 9 V Rechargeable Battery 110 mAh
Max. Current Consumption	2 mA
Temperature Operating Range	-10...60°C (14...140°F)
Humidity Measuring Range	0...100 %RH
Temperature Measuring Range	-199.9....199.9 °C or °F
Reference Humidity Input Signal	0...1V=0...100 %RH
Reference Temperature Input Signal	-1.999V....1.999V=-199.9°C...199.9°C
Transmitter Inputs	See label on the back of instrument
Display	Dual LC Display
Resolution	0.1 %RH, 0.1°C or 0.1°F
Battery Test	Automatic Indication "LOW BAT"
Automatic Power Off	After 2 Minutes
HOLD Function	Push Button Operated
Housing Material	ABS
Housing Dimensions	230 x 80 x 30 mm
Weight	Appr. 290 g (0.64 lb.)