HygroFlex M

Meteorological
Humidity Temperature Transmitter

Instruction Manual

v1 and v2

20020715

Contents

Notes:

Functions such as instrument configuration with a PC as well as the calibration of the HygroClip probe with a PC require the optional HW3 software. Instructions for using the HW3 software are not included in this manual. These instructions are shipped separately on the same CD ROM as the HW3 software.

This manual applies to the HygroFlex M1 and M3, version 1.x or 2.x. To find out about the version number of the HygroFlex M, you need either to connect it to a PC with HW3 installed or to connect it to a HygroPalm indicator by way of the test terminal block.

Overview

The HygroFlex M is a series of 3-wire humidity temperature transmitters that uses the HygroClip S3 digital plug-in probe. The probe is separated from the transmitter by a 3 meter (9.8 ft) cable terminated with a water proof connector. The HygroFlex M series uses a micro-processor based design to achieve unparalleled accuracy, reliability and versatility. Typical uses are meteorological towers, airport weather stations, building rooftops, etc. The enclosure is made of an aluminum alloy and is coated to withstand marine environments.

The HygroFlex M is available in 2 different models:

HygroFlex M1: transmitter with two analog outputs: relative humidity and temperature

- ROTRONIC HygroClip S3 digital probe with 3 meter (9.8 ft) cable
- relative humidity and temperature analog outputs
- software-based probe calibration (HygroClip S3 probe)
- internal service connector (RS232) for configuration with PC (units, ranges)
- two linearized analog outputs, signal type (mA, V) configurable by means of jumpers [1)]
- internal terminal block for communication with the HygroPalm indicator [2)]

1) 0..1V, 0..5V, 0..10V, 0..20 mA, 4..20 mA
2) allows the HygroPalm to read the transmitter and/or calibrate the HygroClip S3 probe

HygroFlex M3: analog / digital, networkable transmitter relative humidity, dew point (or other) and temperature

- ROTRONIC HygroClip S3 digital probe with 3 meter (9.8 ft) cable
- relative humidity, temperature, dew point, wet bulb, mixing ratio, enthalpy, etc [1)]
- software-based probe calibration (HygroClip S3 probe)
- three linearized analog outputs, signal type (mA, V) configurable by means of jumpers [2)]
- internal service connector (RS232) for communication with a PC [3)]
- internal terminal block for communication with the HygroPalm indicator [4)]
- internal RS232 / RS485 terminal block
- separate cable grip (optional) for the RS232/RS485 signal
- optional input (cable grip, short cable ended with an in-line connector) for customer supplied analog pressure probe [5)]

1) Uses either a fixed barometric pressure value or the measurements from an analog pressure probe for those parameters that require pressure as a computational input. The fixed pressure value can be changed with the optional HW3 software.
2) 0..1V, 0..5V, 0..10V, 0..20 mA, 4..20 mA - corresponding to relative humidity, temperature and computed parameter (or replace any of these parameters with barometric pressure)
3) Can be used to configure the transmitter and/or to calibrate the HygroClip S3 probe
4) Allows the HygroPalm to read the transmitter and/or calibrate the HygroClip S3 probe
5) Consult factory. Restrictions apply regarding the signal type and range

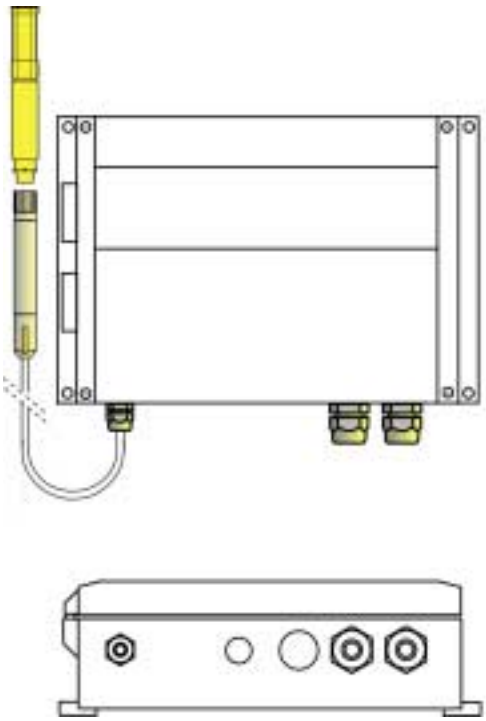

HygroFlex M1

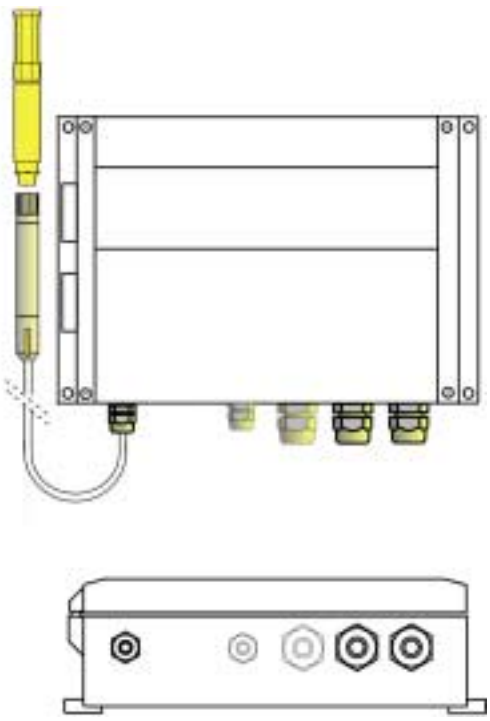

HygroFlex M3
(the two optional cable grips are shown)

General Description

Power Requirements

The HygroFlex M is available with a choice of two basic internal power modules:

- standard power module for operation with 12 to 35 VDC (maximum 300 mA) or with 12 to 24 VAC.
- optional power module for operation with voltages within the range of 90 to 264 VAC (50/60 Hz).

Probes and Probe Inputs

Model	**HygroFlex M1**	**HygroFlex M3**
number of probe inputs	1	1 (standard) or 2 (optional)
probe types (see below)	HygroClip S3 Digital Probe	HygroClip S3 Digital Probe Analog Pressure Probe
number of digital input channels	1	1 (input 1)
number of analog input channels		1 (input 2 - optional)
analog input A/D resolution		10-bit

HygroFlex M3: Prior to using an analog pressure probe, input 2 should be programmed. This can be done with the HW3 software after connecting the RS232 port to a PC (see separate HW3 manual).

HygroClip S3 Digital Probe

The ROTRONIC HygroClip S3 is a highly accurate plug-in digital probe that is calibrated entirely by means of software (no adjustment potentiometers). Because calibration and other data are stored in the probe non-volatile memory, the probe is fully interchangeable. When the probe requires calibration or has to be repaired, it can be replaced with another probe in a few seconds. To reduce the possibility of heating by solar radiation, both the HygroClip S3 and connecting cable are white. The cable insulation is made of PUR, a material with a high resistance to UV.

L. 100mm (3.9")
Dia. 15mm (0.6")

Important: The HygroClip S3 probe should always be used together with a shield to protect it from solar radiation and precipitation. A 10-plate natural aspiration shield is available from ROTRONIC.

Customer Supplied Analog Pressure Probe (HygroFlex M3)

As an option, the HygroFlex M3 transmitter can be equipped with an additional cable grip with a short cable ended with an in-line connector for a customer supplied analog pressure probe. The signal from this probe (barometric pressure) can be used by the HygroFlex during the calculation of parameters such as enthalpy. The calculation of dew point does not require barometric pressure as an input. When no pressure probe is being used, the HygroFlex uses a fixed value for barometric pressure. This value can be adjusted with the HW3 software.

Both the scale and unit of the analog pressure signal can be defined with the HW3 software. HW3 can also be used to configure the HygroFlex to make one of its 3 analog output signals correspond to barometric pressure.

Use of an analog pressure probe is subject to the following restrictions and limitations:

a) Single channel probe (one signal), output signal within the range of 0 to 2.5 VDC, supply voltage: 15 VDC or less, maximum current consumption: 10 mA.

b) Resolution is limited by the 10-bit A/D converter used for the analog input. This converter provides a theoretical maximum of 1024 counts for an input voltage span of 2.5 VDC. In theory, this gives a resolution of 2.5 / 1024 = 0.00244 V. In practice, it is not possible to get 100% of the counts from an A/D converter and the actual resolution should correspond to 0.0027 V (typical) for a signal of 0 to 2.5 V.

Analog Outputs

Model	HygroFlex M1	HygroFlex M3
analog outputs	- relative humidity - temperature	- relative humidity - temperature - computed parameter *see note 1) below*
output signals [2)] configurable with jumpers	0…1 V 0…5 V 0…10 V 0…20 mA 4…20 mA	0…1 V 0…5 V 0…10 V 0…20 mA 4…20 mA
D/A output resolution	humidity: 12-bit temperature: 16-bit	humidity: 12-bit temperature: 16-bit comp. parameter: 12-bit
options		16-bit D/A resolution for the computed parameter analog output, allows 0.1 resolution with a span of more than 200 units.

1) Any of the 3 analog outputs of the HygroFlex M3 can be set as follows: humidity [probe 1] or temperature [probe 1] or calculated parameter [probe 1] or barometric pressure [probe 2] . The HygroFlex is set at the factory as specified when ordering. These settings can be changed at any time with the optional HW3 software (instructions are provided on the HW3 CD).

2) The output signals are set at the factory according to the type and range specified when ordering. A label located on the transmitter housing shows the type of output signal for each unit.

The analog output signals are linear and are consistent with the requirements of most data/signal processing instrumentation (panel meter, computer card, etc.).

Connection to a PC - RS232 Digital Port

Both the HygroFlex M1 and M3 have an internal RS232 service connector (MTA). In addition, the HygroFlex M3 has an internal terminal block for both RS232 and RS485 (see page 9). The HygroFlex M3 can be ordered with an additional cable grip for the digital signal cable. In principle, any communication software can be used to interrogate and read the HygroFlex M3 with the commands described in appendix 7 (RS232 communication protocol). Use of the optional HW3 software simplifies this task. It is important to note the following:

a) HygroFlex M1: use of the RS232 port (internal service connector) is limited to configuring the instrument (units, range, etc.). Measurement data and calibration functions are not available on this port.
b) HygroFlex M3: use either the internal RS232 service connector (MTA) or the RS232 / RS485 terminal block to configure the transmitter or calibrate the probe. The RS232/RS485 terminal block can be used to read data from the transmitter and to put several transmitters on a network.

HW3 Software

Use of the optional HW3 software provides the following functions:

- full access to instrument configuration (unit system, etc.)
- calibration of the ROTRONIC HygroClip S3 digital probe
- RS485 networking (up to 32 FlexMet 3)
- data logging to a PC disk file
- graphic functions (both on and off-line)

HW3 runs on any PC with Windows 98 or NT. For more details see separate instruction manual provided with the HW3 software.

Note: For the purposes of HW3, the HygroFlex M1 is the same as a HygroFlex 1 and the HygroFlex M3 is the same as a HygroFlex 3.

RS485 Networking (HygroFlex M3)

With the optional HW3 software up to 32 HygroFlex M3 transmitters can be connected together on a network. Any transmitter can be used either as a slave or a master, without special configuration. Each unit must be given a unique network address with the HW3 software (0 to 31). The master is automatically the unit that is connected to the COM port of the PC by means of the RS232 port. See Electrical Installation for details.

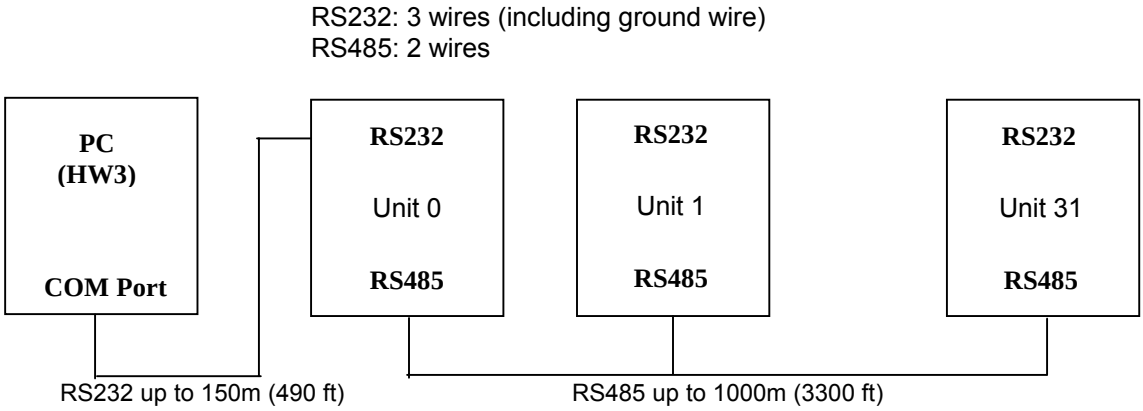

Unit System

The unit system of the HygroFlex (Metric or English) is factory programmed as specified when the instrument was ordered. The unit system can be easily be changed by the user with the optional HW3 software, after connecting the transmitter to a PC (see RS232 digital port).

Installation

Each HygroFlex M transmitter is shipped in an individual box. The cable used to plug-in the HygroClip S3 probe is already installed on the transmitter. The HygroClip S3 probe is shipped in a separate box.

The shipping box used for the HygroFlex has a label with the following information: instrument type, main specifications and serial number. An identical label is located inside of the transmitter enclosure.

Installation of the Transmitter Enclosure

Use the 4 holes shown below to attach the enclosure on a suitable mounting plate. The mounting plate itself can be secured with U bolts to the pole that will be used for the HygroClip S3 probe and radiation shield.

Mounting plate A-HFM is available from Rotronic and includes U bolts for use on a 1.5” pole.

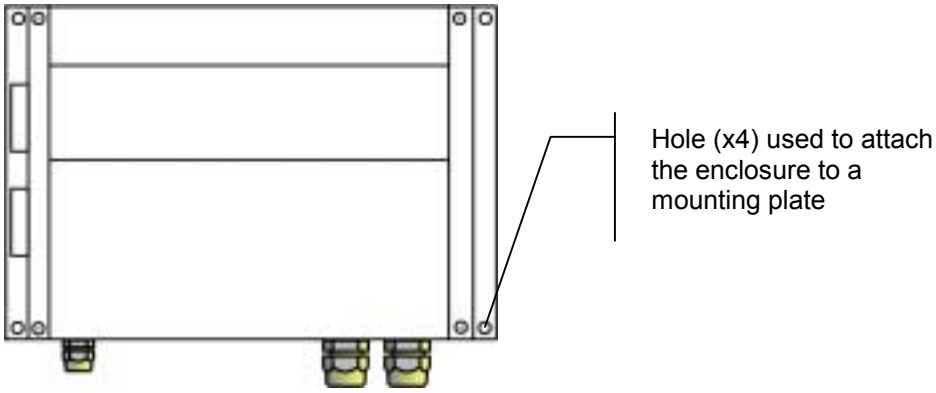

Electrical Installation

The front cover has two hinges and is secured with 4 screws. Open the front cover to gain access to the terminal blocks used to power the transmitter and to connect the analog output signals.

All terminal blocks can be unplugged from the electronics board to facilitate wiring installation.

Cable grips provide effective sealing only with cables having the proper outside diameter. Preferably, use a cable with an outside diameter of 6 to 7 mm (0.236 to 0.275”) and with 18AWG wires. Seal any unused cable grip.

Ground the HygroFlex and run the analog output signal cable separately from the power cable.

Electrical Connections

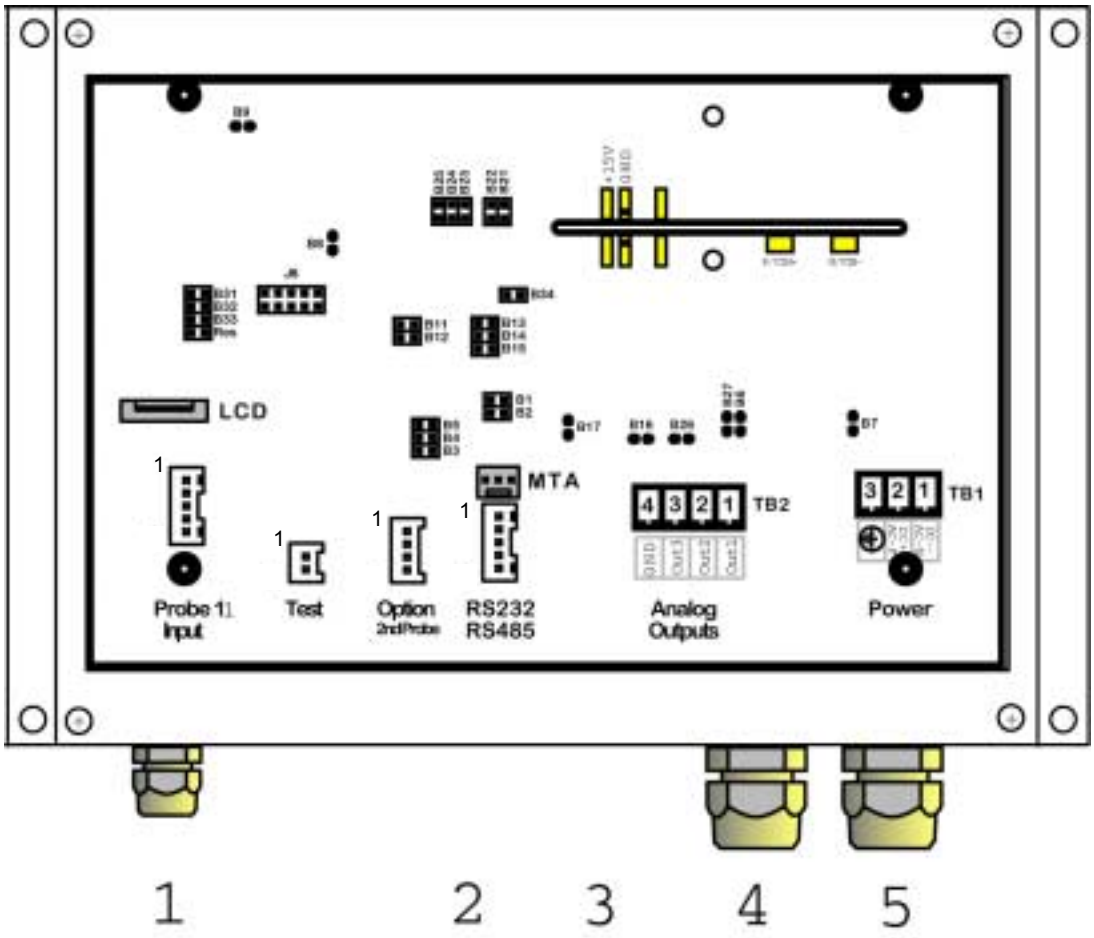

1: cable grip for the HygroClip S3 probe.
2: optional cable grip for analog pressure probe (not shown - HygroFlex M3 only)
3: optional cable grip for digital output (not shown – HygroFlex M3 only)
4: cable grip for analog output signals (can be used for digital output)
5: cable grip for power

HygroFlex M3: use cable grip 4 for the digital signal when the analog output signals are not used. If sharing one cable for both type of signals, be sure that there is no cross talk.

Function of the Terminals on the Printed Circuit Board:

1- HygroClip S3 Probe	1 : Temperature (analog +) 2 : Humidity (analog +) 3 : GND 4 : Digital Input Output 5: +VDC
2 - Test (HygroPalm Calibrator)	1 : GND 2 : Digital Input Output
3 - Pressure Probe	1 : Analog Input Signal (+) 2 : GND 3 : not used 4 : + VDC
4 - RS232/RS485	1 : 485 – (RI -) 2 : 485 + (RI +) 3 : GND 4 : RXD 5 : TXD
5 - Analog Outputs	1 : Out 1 (+) 2 : Out 2 (+) 3 : Out 3 (+) – HygroFlex M3 only 4 : GND (common)
6 - Power	1 : AC N or DC – 2 : AC Ph or DC + 3 : GND (check label inside enclosure)
MTA (above the RS terminal block)	service / configuration connector connect to PC COM port with cable AC1623

RS232 Connection (PC side)

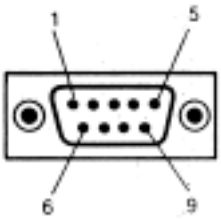

RS232 connection (PC side)

Pin #	Function
2	TX
3	RX
5	GND

Electrical Diagrams (analog outputs)

Before making the electrical connections, be sure to correctly identify each connector and terminal. Applying power to any of the input or output terminals can severely damage the transmitter.

12 to 35 VDC or 12 to 24 VAC supply voltage and voltage output signals

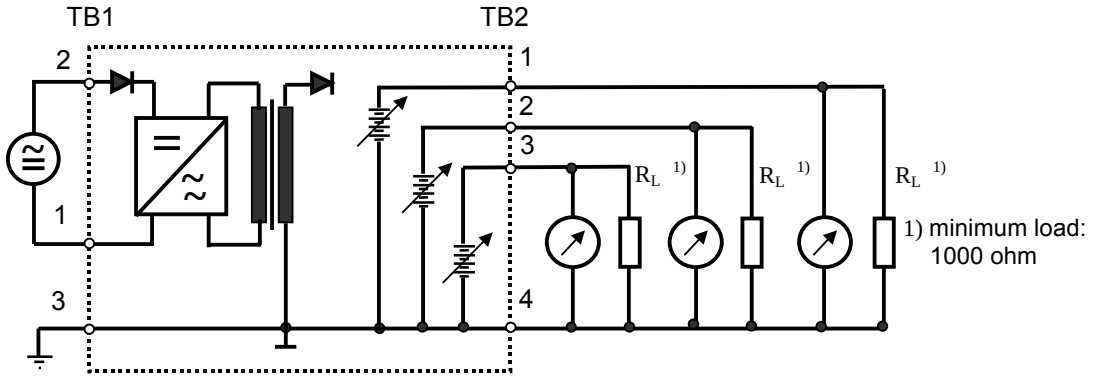

TB1 (1)	12…35 VDC (-) or 12…24 VAC neutral	TB2 (1)	Relative humidity (+)
TB1 (2)	12…35 VDC (+) or 12…24 VAC Ph	TB2 (2)	Temperature (+)
TB1 (3)	Ground	TB2 (3)	Calculated Parameter (+)
		TB2 (4)	Common (-)

Output cable: cable resistance should not be more than 1/1000 of the load resistance.

90…264 VAC with optional power module and current output signals

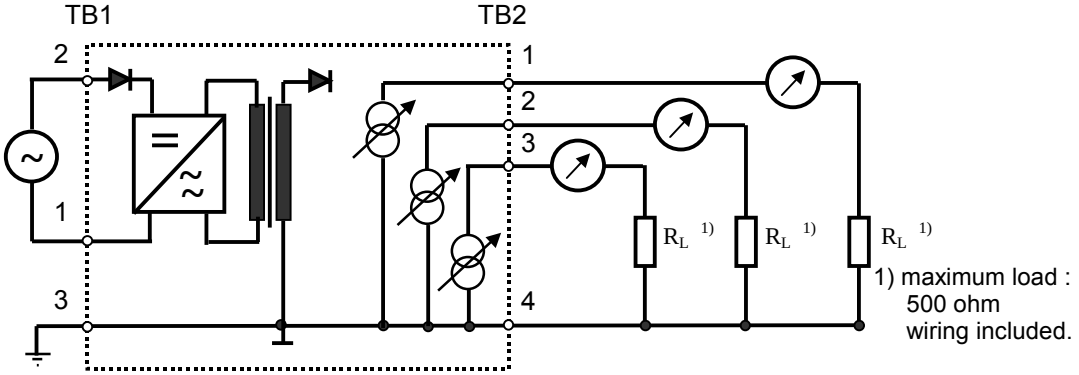

TB1 (1)	90…264 VAC Neutral	TB2 (1)	Relative humidity (+)
TB1 (2)	90…264 VAC Phase	TB2 (2)	Temperature (+)
TB1 (3)	Ground	TB2 (3)	Calculated Parameter (+)
		TB2 (4)	Common (-)

Configuration of the Analog Outputs

On the HygroFlex M1 and M3, the **type of output signal** can be selected by means of jumpers for each output. These jumpers are located on the PCB of electronics module:

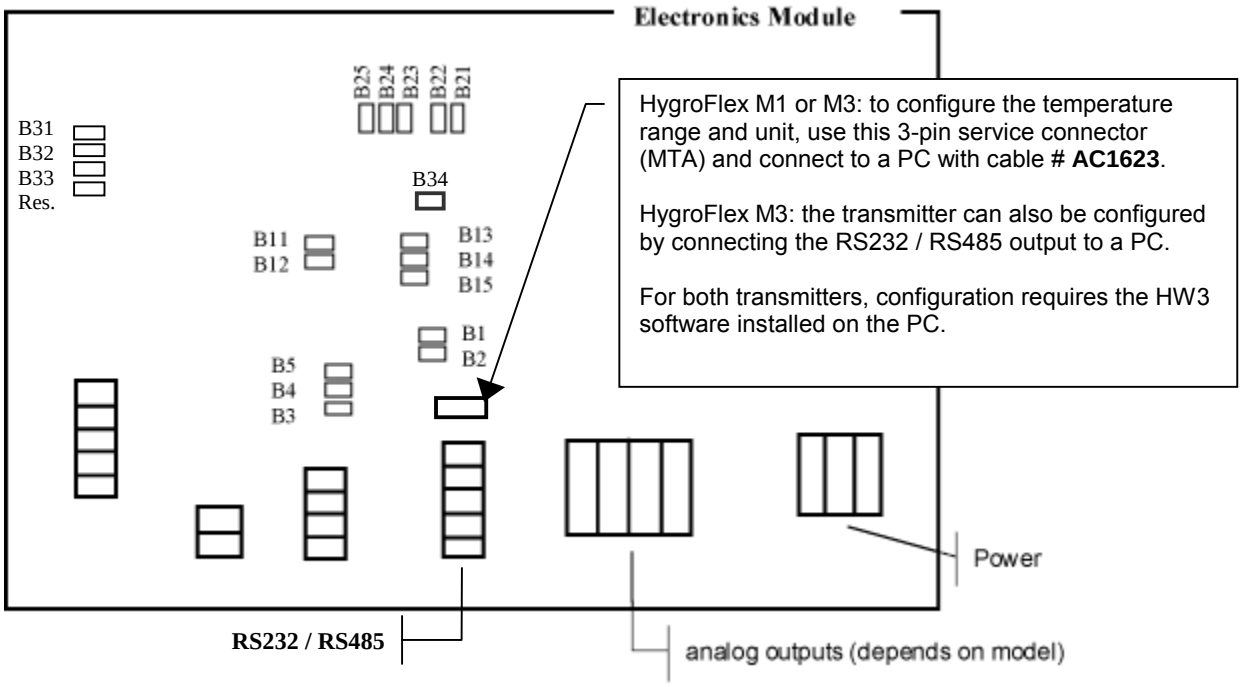

Signal	OUT 3 [1)]	OUT 2	OUT 1
0…1 V	B2, B3, B31	B22, B23, B31	B12, B13, B31
0…5 V	B2, B4, B32	B22, B24, B32	B12, B14, B32
0…10 V	B2, B5, B31, B32	B22, B25, B31, B32	B12, B15, B31, B32
0…20mA	B1, B3, B33, B34	B21, B23, B33, B34	B11, B13, B33, B34
4…20mA	B1, B3, B31, B33, B34	B21, B23, B31, B33, B34	B11, B13, B31, B33, B34

1) HygroFlex M3 only (computed parameter)

The scale (or range) of each analog output can be changed with the HW3 software (see separate instructions). On the HygroFlex M3, the parameter corresponding to the third output can also be changed with the HW3 software (see separate instructions).

Network Configuration and Wiring (HygroFlex M3)

The RS232 connection between the HygroFlex and a PC requires 3 wires: RX, TX and GND [1)] . Without a signal booster, the maximum cable length is limited to 150 m (490 ft).

1) GND is internally connected to the power ground of the transmitter

The RS485 wiring can be done with a twisted pair (2-wire, telephone type) and wall mounted RJ45 receptacles. No shielded cable and no terminator should be required.

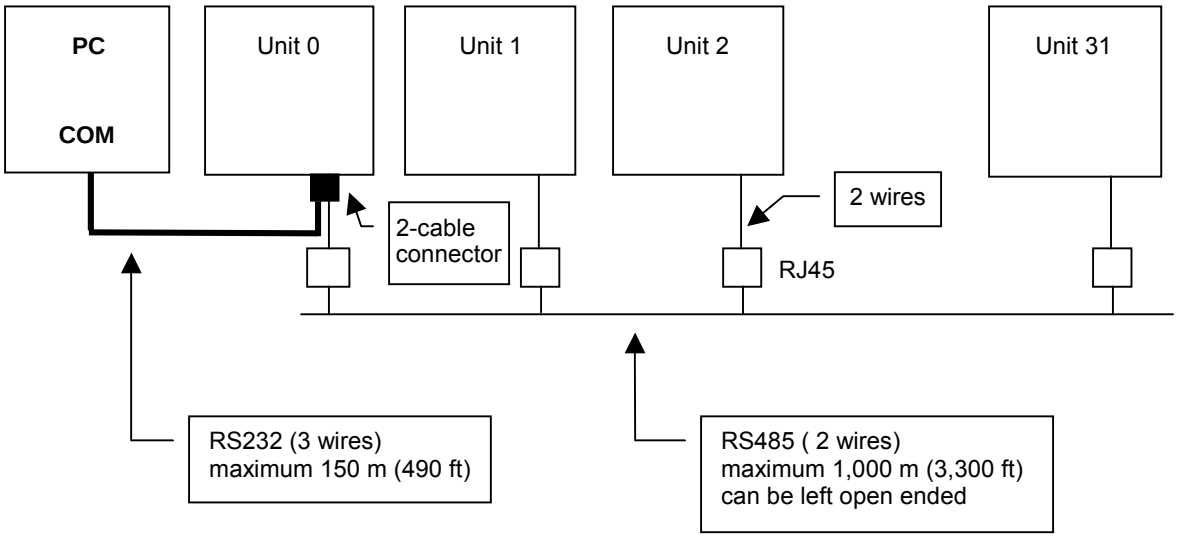

Both the RS232 and RS485 connections share the same terminal block on the first unit (0). Be sure to observe the polarity for each connection.

Prior to networking the transmitters, they should be individually configured with the HW3 software (see separate instructions on the HW3 CD ROM). Proceed as follows:

1) Connect each transmitter, one at a time, to the COM port of the PC (see also note below)

2) **Assign to each transmitter a unique network address** (a number between 0 and 31). By default, all transmitters are shipped by the factory with address 0.

   Note: if you assign address 1 to the first transmitter, you can connect a second transmitter (with the 0 default address) to the network and then use the network to directly change its address from 0 to 2. Proceed in this manner to add more transmitters one at a time, using addresses 3, 4, 5, etc.

3) For easier identification, you may also want to give at that time a descriptive name (maximum 30 characters) to each transmitter.

Probe Installation Guidelines

Install the probe so that the local conditions at the sensors are typical of the environment to be measured:

• Use either a shield or a louvered shelter to protect the probe and sensors from direct exposure to solar radiation and precipitation. A natural aspiration shield is available from ROTRONIC (see Appendix 7).

• In an open field, install the probe at least 4 feet (1.2 meter) above ground in the case of a grassy, non reflective field. For roof top installation or any installation above a reflective surface, a minimum elevation of 33 ft (10 meter) may be required.

Test terminal block for use with a HygroPalm indicator

The test terminal block (see page 9) offers the possibility of using a HygroPalm portable indicator as an alternative to using a PC or laptop to communicate with the HygroFlex. The functions that can be accessed are listed below. The Remote Control mode of the HygroPalm indicator is automatically activated by connecting any probe input of the HygroPalm to the test terminal block of the transmitter. The Remote Control mode allows the following:

	HygroPalm 3
Display the readings from any probe connected to the transmitter	**x**
Display the transmitter status (configuration, serial number, etc.)	**x**
1-point adjustment of any ROTRONIC HygroClip digital probe connected to the transmitter, using the probe connected to the HygroPalm as a reference	**x**
Access the functions of the transmitter, primarily the ADJUST M.PT function.	**x**

Procedure

HygroPalm 3: connect cable #**AC1620-P** to the second probe input of the HygroPalm

As soon as the two instruments are connected, the HygroPalm detects the transmitter and this is indicated by a flashing star on each side of the LC display. At that time, the display of the HygroPalm shows data from the remote unit and can no longer be used to access local data from the HygroPalm. Similarly, the function keys of the HygroPalm control the transmitter and not the HygroPalm itself.

To exit the Remote Control mode, simply disconnect the two instruments.

Notes:

Using the Remote Control mode does not disturb the output signals (analog or digital) of the transmitter. The outputs keep being normally updated.

The HygroPalm cannot be turned off while in the Remote Control Mode.

Display the Probe Measurements

As soon as the Remote Control mode is initiated, the HygroPalm displays the measurements from the HygroClip S3 probe connected to the transmitter. If necessary, use the UP or DOWN key on the HygroPalm to display probe 1.

Function Menu of the HygroFlex M

In the remote mode, the HygroPalm can be used to access the function menu of the HygroFlex M. This menu includes functions such as OUTPUT, ADJUST M.PT, etc. which are described further down in this manual.

Press the MENU key of the HygroPalm to access the functions of the HygroFlex M. Use the UP and DOWN keys to navigate the function menu. Selections are confirmed by pressing the ENTER key.

OUTPUT (displays the transmitter output signals)

Definition

This function displays the values sent to each analog output. This is useful with the HygroFlex M3, where one of the outputs is a calculated value such as dew point and, therefore not a value directly measured by the HygroClip S3 probe. The display shows the values at the time the menu key was pressed and these values are not updated to the display as long as the function is active. This allows the values to be correctly compared. The analog output signals keep being updated.

Procedure

When entering the function, analog output 1 is displayed first. Use the UP or the DOWN key to display the other outputs.

ADJUST M.PT (2- to 4-point adjustment against a reference environment)

Definition

The Adjust M.PT function permits to calibrate and adjust the ROTRONIC HygroClip S3 digital probe against a known reference environment. This function is designed to permit calibration at 2 temperature values and at up to 4 relative humidity values. *To prevent unauthorized or accidental changes, lock the keypad (software configuration with HW3) to block out access to this function from the keypad of the HygroPalm calibrator.*

Selections

The Adjust M.PT function offers the following choices (use the UP and DOWN keys):

RHS: Humidity calibration using the ROTRONIC Humidity Standards [1)]
Humidity: Humidity calibration using any suitable reference environment
Temperature: Temperature calibration using any suitable reference environment

1) For humidity calibration, ROTRONIC offers convenient, certified humidity standards to generate known humidity values (for more details, see Appendix 3 - Humidity Calibration).

Procedure

Be sure to select probe 1 on the display of the HygroPalm indicator prior to entering the function.

When using the Adjust M.PT function, it is important to observe the following rules:

a) Always calibrate temperature first (if temperature needs to be calibrated)

b) When calibrating temperature (2 points), always calibrate at the low value first. The instrument is programmed to use the low temperature value to compute the offset and the high temperature value to compute the gain.

   T-low < 70 °C (158°F) : used to compute the calibration offset
   T-high ≥ 70 °C (158 °F) : used to compute the calibration gain

   For best accuracy, we recommend using a T-low value close to 20°C (68°F). Preferably, the difference between T-high and T-low should be at least 50 °C (90 °F)

c) When calibrating relative humidity (2, 3 or 4 points) with the ROTRONIC humidity standards, always follow the sequence 35 %RH, 80 %RH, 10 %RH or 5 %RH, 0 %RH. When using a reference other than the ROTRONIC humidity standards, use reference conditions that are within the following brackets and observe the sequence:

   >25 %RH…≤55 %RH [1)] : used to compute the calibration offset
   >55 %RH [1)] : used to compute the calibration gain
   >1 %RH…≤25 %RH : sensor linearity adjustment
   ≤ 1 %RH : sensor linearity adjustment

   The HygroPalm is programmed to automatically recognize these brackets.

   1) For best accuracy, we recommend using values close to 35 %RH and 80 %RH

When the probe is at equilibrium with the reference environment, activate the Adjust M.PT function and make the appropriate selections:

a) **RHS**: press the ENTER key to select this item. The LC display shows the value read by the probe at the time the ENTER key was pressed. The letters “RHS” are displayed on the message line. Use the UP or the DOWN key to change the humidity value to match the mean value (at 23°C) written on the certificate supplied with the standard. For a faster change, keep the key pressed down. Press the ENTER key when done.

   Note: in the RHS mode, the software automatically compensates for the effect of temperature on the humidity standard. No additional correction is required.

b) **Humidity or Temperature**: press the ENTER key to select. The LC display shows the value read by the probe at the time the ENTER key was pressed. The word “humidity” or “Temperature” is shown on the message line. Use the UP or the DOWN key to change the humidity or temperature value to match the value of the reference environment. For a faster change, keep the key pressed down. Press the ENTER key when done.

After pressing the ENTER key, the message “sure?” should appear on the LC display. Press ENTER to confirm. Next, the LC display will confirm that the probe adjustment has been successfully completed. At that time, press ENTER to exit or MENU to return to the function Adjust M.PT and do another calibration point.

Carry on in the same manner for each calibration point, following the sequence described above.

Note: you can exit the function at any time (without calibrating the probe) by pressing the MENU key.

ADJUST 1PT (1-point adjustment against a reference environment)

Definition

The Adjust 1PT function permits to do a 1-point adjustment (offset adjustment) of the ROTRONIC HygroClip S3 digital probe against a known reference environment. This function is limited to a simple offset adjustment that is applied across the entire measuring range. *To prevent unauthorized or accidental changes, lock the keypad (software configuration with HW3) to block out access to this function from the keypad of the HygroPalm calibrator.*

Warning: a 1-point adjustment is no substitute for an adjustment at 2 or more points. Adjusting the probe at only one value can improve accuracy over a narrow range of conditions and may also be detrimental to accuracy at other conditions.

Selections

The Adjust 1PT function offers the following choices (use the UP and DOWN keys):

RHS: Humidity calibration using the ROTRONIC Humidity Standards [1)]
Humidity: Humidity calibration using any suitable reference environment
Temperature: Temperature calibration using any suitable reference environment

1) For humidity calibration, ROTRONIC offers convenient, certified humidity standards that generate known humidity values (for more details, see Appendix 3 - Humidity Calibration).

Procedure

Be sure to select probe 1 on the display of the HygroPalm indicator prior to entering the function.

When the probe is at equilibrium, activate the Adjust 1PT function and make the appropriate selections:

a) **RHS**: press the ENTER key to select this item. The LC display shows the value read by the probe at the time the ENTER key was pressed. The letters “RHS” are displayed on the message line. Use the UP or the DOWN key to change the humidity value to match the mean value (at 23°C) written on the certificate supplied with the standard. For a faster change, keep the key pressed down. Press the ENTER key when done.

   Note: in the RHS mode, the software automatically compensates for the effect of temperature on the humidity standard. No additional correction is required
   .

b) **Humidity or Temperature**: press the ENTER key to select. The LC display shows the value read by the probe at the time the ENTER key was pressed. The word “humidity” or “Temperature” is shown on the message line. Use the UP or the DOWN key to change the humidity or temperature value to the value of the reference environment. For a faster change, keep the key pressed down. Press the ENTER key when done.

After pressing the ENTER key, the message “sure?” should appear on the LC display. Press ENTER to confirm. Next, the LC display will confirm that the probe adjustment has been successfully completed. At that time, press ENTER to exit.

Note: you can exit the function at any time (without calibrating the probe) by pressing the MENU key.

ADJUST REF

Note: this function is available only with the following products: (a) HygroFlex M1 version 2 and (b) HygroFlex M3 (all versions).

The function Adjust REF is used to do a 1-point adjustment of the ROTRONIC HygroClip S3 probe [1)] connected to the transmitter against the probe connected to the HygroPalm indicator. The function adjusts both humidity and temperature simultaneously.

1) When no such probe is detected, the message “connect fail” will be displayed.

Press MENU and use the UP or the DOWN key to access Adjust REF from the function menu. Press ENTER to select this function.

After pressing the ENTER key, the display of the HygroPalm shows the relative humidity and temperature data from the reference probe. The message REF = PALM should appear on the LC display. The data on the display is the data read by the reference probe at the time the ENTER key was pressed. This data is not updated while the function Adjust REF is active (see Notes below).

Press the ENTER key to accept the reference data. The message “sure ?” should appear on the LC display. Press ENTER to do the 1-point adjustment of both humidity and temperature or press MENU to abort and exit this process. When the message “Adjust OK” appears, press ENTER to exit.

Note:

Expose both probes to be to the same stable environment. Ventilation of both probes is highly recommended. Observe the readings from both probes for complete equilibration (this can be done by entering and exiting a few times the function Adjust REF so as to check both probes prior to adjusting).

PROBE

Definition

This function displays the version number and serial number of the ROTRONIC HygroClip S3 digital probe connected to the transmitter.

Procedure

Prior to entering the function, select the probe 1 on the HygroPalm indicator. When entering the function, the version number of the probe is displayed first. Use the UP or the DOWN key to display the serial number of the probe.

SETTINGS (HygroFlex M3 only)

This function does not apply since the HygroFlex M3 is not supplied with a display.

SYS STATUS

Definition

This function displays the software version of the instrument, the RS232 configuration (baud rate, parity, bits and stop bit), the network address, any user defined description for the instrument and the serial number of the instrument.

This information is for display only. Some parameters such as the network address can be changed with the HW3 software, after connecting the instrument to a PC.

Procedure

When entering the function, the software version number is displayed first. Use the UP or the DOWN key to display the other data.

Errors and Status Messages

The following is a list of coded messages (101, etc.) that the HygroFlex M may show via RS232 / RS485.

Errors:		
101	checksum error	the checksum test did not pass during RS-communication.
102	bad command	an unknown command was received
103	disallowed command	a command was received that is reserved for production and service
104	unknown probe input	reference was made to a non-existing analog or digital probe input
105	argument error	error in the number of the arguments in the command or in the value of one of the arguments
106	HygroClip communication error	the HygroClip probe does not answer or is not connected
107	calibration error	the difference between the probe reading and the calibration point is larger than the maximum allowed by the INI command.
108	calibration error (overflow)	internal probe error (or the difference between the probe reading and the calibration value is too large)
110	unknown reference probe	the reference probe is not connected or the reference probe input does not exist
111	Temperature error	During humidity calibration, temperature should be within the limits of 0 and 80°C (32 and 176°F)

Warnings:		
120	no adjustment	calibration
121	No HygroClip probe is connected	

Status:		
130	the probe was adjusted	calibration

Environmental Limits

The HygroFlex can operate in the temperature range of - 40...60°C (- 40…140°F).

The operating limits of the HygroClip S3 probe are - 40...85°C (- 40…185°F).

Maintenance

On-Site Maintenance

The HygroFlex M has a test terminal block that can be used to connect a portable HygroPalm indicator. Use cable AC1620-P to connect the two instruments.

The HygroPalm 3 indicator allows using the probe of the HygroPalm as a reference to check at one humidity and temperature value the HygroClip S3 probe connected to the transmitter.

In general, we do not recommend adjusting the HygroFlex M against a reference probe when either the transmitter and its probe are outdoors. If the transmitter and its probe are in a stable indoor environment, you should make sure that both the transmitter and the reference probe are exposed to the exact same environment and are at temperature and humidity equilibrium. Ventilation of both probes (same air stream) is highly recommended.

Factory / Metrology Lab. Maintenance

The HygroFlex M should not require any routine maintenance other than validating the analog probe input (pressure probe) and the analog outputs. Please, contact the factory if the analog outputs require any adjustment. See **appendix 2 and appendix 3** regarding the maintenance of the HygroClip S3 probe used with the HygroFlex M.

Specifications

Operating Voltage		12 to 35 VDC / 300 mA max. or 12 to 24 VAC
	or	90 to 264 VAC 50/60 Hz
Operating limits at electronics		0…99 %RH (non condensing) -40...60°C (-40...140°F)
Measured parameters [1)]		
relative humidity	typical range	0…100 %RH
	indication range	0.0 to 100.0 %RH
temperature	typical ranges	0…100 °C, -50…150°C, 0…200°C 0…100 °F, -50…250°F, 0…400°F
	indication range	-99.9 to 999.9 °C or °F
barometric pressure [2)]	typical range	0…2000 hPa / 0…50 PSI / 0…100 InHg
	indication range	0.000 to 9999 hPa/PSI/InHg
Calculated parameters [1) 2)]		
dew / frost point [3)]	typical range	-50…100 °C / -50…200°F
	indication range	-99.9 to 999.9 °C or °F
wet bulb temperature [4)]	typical range	0…100°C / 0…200°F
	indication range	0.0 to 100.0°C / 32 to 212.0°F
enthalpy [4)]	typical range	-50…250 J/g or -50..150 BTU/lb
	indication range	-99.9 to 9999 J/g or BTU
vapor concentration	typical range	0…500 g/m3 or 0…250 gr/cuft
	indication range	0.000 to 9999 g/m3 or gr/cuft
specific humidity [4)]	typical range	0…500 g/kg or 0…4000 gr/lb
	indication range	0.000 to 9999 g/kg or gr/lb
mixing ratio [4)]	typical range	0…500 g/kg or 0…4000 gr/lb
	indication range	0.000 to 9999 g/kg or gr/lb
vapor concentration at saturation	typical range	0…500 g/m3 or 0…250 gr/cuft
	indication range	0.000 to 9999 g/m3 or gr/cuft
part. pressure of water vapor	typical range	0…500 hPa / 0…10 PSI / 0…20 InHg
	indication range	0.000 to 9999 hPa / PSI / InHg
sat. pressure of water vapor	typical range	0…500 hPa / 0…10 PSI / 0…20 InHg
	indication range	0.000 to 9999 hPa / PSI / InHg
System accuracy at 23°C/73°F		± (0.5%RH + 1.5% of reading)
with HygroClip S3 probe & 4-point calibration		± 0.2°C / 0.4°F
Number of probe inputs	HygroFlex M1	1
	HygroFlex M3	1 (standard) or 2 (optional)
Probe type	all models	ROTRONIC HygroClip S3 digital probe
	HygroFlex M3	Third-party analog pressure probe [5)]
Analog outputs (scalable)	HygroFlex M1	2: relative humidity and temperature
	HygroFlex M3	3: relative humidity, temperature and calculated parameter [6)]
Analog signals (selectable)	all models	0…1V, 0…5V, 0…10V 0…20 mA, 4…20 mA
Minimum load for voltage outputs		1000 ohm
Maximum load for current outputs		500 ohm

Serial output [7]	HygroFlex M1/M3	RS232 (internal service connector)
	HygroFlex M3	RS232 / RS485
Electrical Connections	power	cable grip and terminals [8]
	analog outputs	cable grip and terminals [8]
	serial output	cable grip (optional) and terminals [9]
	probe input(s)	cable grip and terminals
Cable Grip Material		Nickel plated brass
Housing Material		Aluminum AlSi12 DIN 1725 painted white over marine environment primer
Housing Dimensions		245 x 135 x 75 mm (9.65 x 5.32 x 2.95”)
Weight		1,300 g (2.86 lb)
Protection grade		IP65 / NEMA 4

1) Specify engineering units and range when ordering (both can be changed by user with optional HW3 software). See separate probe specifications regarding the different range limits
2) Not available with the HygroFlex M1. The accuracy of the computed parameter is limited by the accuracy of the measured parameters on which it is based
3) The standard factory setting is frost point for values below freezing. This setting can be changed to dew point with the optional HW3 software
4) A fixed value is used for the computations of this parameter. The fixed pressure value can be changed by the user with the optional HW3 software. The HygroFlex M3 can also be programmed to accept the input from a pressure probe (variable pressure value)
5) Third-party pressure probe: linearized voltage output signal within the range of 0..2.5 VDC, supply voltage 15 VDC, 10 mA
6) The span of the computed parameter should be determined under consideration of the D/A resolution of the corresponding analog output (12-bit is standard for output # 3). Depending on the desired signal resolution, a wide span may require the optional 16-bit D/A converter for analog output # 3
7) RS485 network: requires the first transmitter to be connected to the RS232 COM port of a PC
8) Recommended cable for cable grips: 7..9 mm diameter (0.275..0.354”) with 18 AWG wires. Cable for output signals should preferably be shielded.
9) HygroFlex M3 only: this is a 5-pin terminal block that is shared by the RS232 and RS485 signals.

Appendix 1: Resolution of the Analog Signals

The HW3 software allows to define the range of the analog output signals of the HygroFlex M3. When selecting a range, it is important to consider the fact that the resolution of the analog output signal depends on the span of the selected range.

The HygroFlex M3 uses two 12-bit D/A converters to generate the analog output signals for relative humidity (output #1) and for the computed parameter (output #3). In theory, a 12-bit D/A converter can distinguish between 4,096 values (or counts). This number of counts, together with the span of the signal (%RH, °C, etc.), determines the resolution of the analog output signal.

Because of the tolerance in the analog components associated with the D/A converter, the number of counts that are effectively used tends to be less than the theoretical maximum. Typically, only about 90% of the counts (3,680) may be effectively used.

In addition, the analog output signal may be a partial range. For example, 4…20 mA is a partial range of 0…20 mA. With a 4…20 mA output signal, the number of useful D/A counts is further reduced by 20% (1 - 16/20) and only 72% of the count (2,950 counts) may be effectively available.

Taking the example of a 4…20 mA output, the span of the analog signal should not exceed 140 to 150 units (for example –50 to 100°C dew point) to maintain a resolution of 0.1 unit. With analog signal such as 0…5V or 0…20 mA, a maximum span of 180 units could be used.

The above examples are based on a resolution of 0.05 units as this prevents the analog output signal from bouncing around by ± 0.1 units.

For the temperature analog output signal, both the HygroFlex M1 and M3 use a 16-bit D/A converter. This is more than sufficient to offer 0.1 resolution for any temperature range and any type of analog signal available with the HygroFlex M1 and M3.

Appendix 2: Maintenance of the ROTRONIC probes

Cleaning or Replacing the Dust Filter of the Probe

As a standard, the HygroClip S3 supplied with the HygroFlex M comes with a metal filter base with a removable foam filter cartridge. This type of filter is suitable for protecting the sensors against salt spray. As an option, the foam cartridge can be replaced with a wire mesh cartridge to provide faster sensor response.

Depending on the conditions of measurement, the filter should be checked from time to time.

If necessary, the filter cartridge can be easily removed for cleaning.

Do not remove the metal filter base as doing so could damage the sensors.

Periodic Calibration Check of the Probes

Long term stability of the ROTRONIC Hygromer humidity sensor is typically better than 1 %RH per year. For maximum accuracy, calibration of the probe should be verified every 6 to 12 months. Applications where the probe is exposed to significant pollution may require more frequent verifications.

Both the Pt 100 RTD temperature sensor and associated electronics are very stable and should not require any calibration after the initial factory adjustment.
For routine calibration checks, the probe should be verified at one or two values of humidity.
For more details, see **appendix 3** - **Calibration Basics** and **Functions of the optional test connector – ADJUST M.PT**.

Appendix 3: Calibration Basics

The following choices are available to calibrate the HygroClip S3 probe used with the HygroFlex M:

a) Calibration of the probe alone (removed from the transmitter), using a PC with the optional HW3 software and the **MOK-03-WIN** calibration cable (separate instructions on the HW3 CD).
b) Calibration of the probe (attached to the transmitter) using a HygroPalm 3 indicator and cable **AC1620-P** (see test terminal block, p 14 of this manual)
c) HygroFlex M3 only: calibration of the probe (attached to the transmitter), using a PC with the optional HW3 software and the **AC1623** service cable (separate instructions on the HW3 CD).

Note: the HygroFlex itself should not require any field calibration.

Temperature Calibration

Note: the stability of the Pt100 RTD sensor used to measure temperature is such that temperature calibration in the field is seldom required.

In order to be able to correctly evaluate the accuracy of the temperature measurements provided by the probe, you should be able to meet the following requirements:

a) Both the probe and a reference thermometer should be ventilated with the same stream of air. Any dust filter used to protect the sensors should be carefully removed from the probe. If the probe has a protective slotted cap, this may be left on the probe.

b) Air velocity at the sensor should be within the limits of 200 to 500 feet/minute (1 to 2.5 meters/second). Any comparison between two instruments at a velocity under 200 feet/minute may not be valid. Air velocity above 500 feet/minute may damage the unprotected humidity sensor.

c) The temperature of the air stream should be practically constant.

If you cannot meet the above requirements, you should not attempt to calibrate temperature.

Humidity Calibration

ROTRONIC provides easy-to-use, certified humidity standards for those customer who do not have access to a humidity generator. To use these standards, you will need a calibration device type ER-15 that is suitable for the HygroClip S3 probe.

Calibration Device

The calibration device is a small airtight container that fits on the probe and seals around the humidity sensor. During calibration, a known reference humidity is produced inside the calibration device by means of a humidity standard (usually an aqueous salt solution).

Certified Humidity Standards

The ROTRONIC certified standards are available in boxes of 5 glass ampoules of the same value, which can be stored indefinitely. Standards in the range of 5 to 95 %RH are non-saturated aqueous salt solutions that are precisely titrated at our factory for the right concentration. The 0 %RH humidity standard is made of small granules of a highly porous ceramic that have been dried at a high temperature. A Material Safety Data Sheet is available for each standard. Since most standards are a salt solution, parts which have come in contact with the liquid should be cleaned after each use.

Each box of standards comes with a certificate that provides statistical information on the manufacturing batch of the standard. Information on the effect of temperature on each standard is provided on the cover of each box of standard. When calibrating either with the HygroFlex or with the HW3 software, the effect of temperature on the standards is compensated by the software and no further correction is required. The value of the standards is not affected by altitude.

Instructions for using the Standards

- Install the calibration device on the probe so that the receptacle (or solution holder) is under the probe. Check for a tight fit and remove the receptacle from the calibration device.
- Place one fiber disc (each box of standards includes 5 discs) in the receptacle of the calibration device. The purpose of this disc is to prevent accidental spilling of the solution inside the calibration device or on the humidity sensor.
- Tap the top of the ampoule so that all liquid drops to the bottom of the ampoule. Snap off top and empty contents on fiber disc. Since the ampoule is made of glass, exercise proper caution (gloves, safety glasses) when snapping off the top.
- Put the receptacle back on the calibration device and make sure that the solution does not come in contact with the sensor: The solution inside the calibration device should never be on top of the sensors.
- Allow at least 60 minutes to insure that the calibration device, the solution and the sensor are in a state of equilibrium. This is verified by monitoring the display.
- After adjusting the probe, remove the receptacle from the calibration device. Throw away the wet disc (non reusable). Thoroughly wash and wipe dry the receptacle.

General Recommendations

During calibration, temperature stability is the single most important requirement. If possible, calibrate the probe is room temperature (18 to 25°C). Room temperature should be stable to ± 0.25°C or better during the period of time required for each calibration point. Do not calibrate close to an air vent or a heater, in direct exposure to sun rays, etc.

If using a humidity generator to calibrate the probe, make sure that the probe is as fully immersed in the generator as possible to minimize temperature effects.

Appendix 4: Humidity Definitions

Relative Humidity

Relative humidity is the ratio of two pressures: %RH = 100 x p/ps where p is the actual partial pressure of the water vapor present in the ambient and ps the saturation pressure of water at the temperature of the ambient.

Relative humidity sensors are usually calibrated at normal room temperature (above freezing). Consequently, it generally accepted that this type of sensor indicates relative humidity with respect to water at all temperatures (including below freezing).

Ice produces a lower vapor pressure than liquid water. Therefore, when ice is present, saturation occurs at a relative humidity of less than 100 %. For instance, a humidity reading of 75 %RH at a temperature of -30°C, corresponds to saturation above ice.

Dew Point / Frost Point Temperature

The dew point temperature of moist air at the temperature T, pressure P_b and mixing ratio r is the temperature to which air must be cooled in order to be saturated with respect to water (liquid).

The frost point temperature of moist air at temperature T, pressure P_b and mixing ratio r is the temperature to which air must be cooled in order to be saturated with respect to ice.

Wet Bulb Temperature

The wet bulb temperature of moist air at pressure P_b, temperature T and mixing ratio r is the temperature which the air assumes when water is introduced gradually by infinitesimal amounts at the current temperature and evaporated into the air by an adiabatic process at constant pressure until saturation is reached.

Vapor Concentration

The vapor concentration (density of water vapor in a mixture) or absolute humidity, is defined as the ratio of the mass of water vapor M_v to the volume V occupied by the mixture.

$D_v = M_v / V$, expressed in grams/m^3 or in grains/cu ft

This can be derived as follows from the equation PV = nRT:

a) $Mv = n \times m_w$, where :

n = number of moles of water vapor present in the volume V
m_w = molecular mass of water

b) $D_v = M_v /.V = n \times m_w / V = m_w \times p / RT$, where:

m_w = 18.016 gram
p = partial pressure of water vapor [Pa]
R = 8.31436 Pa x m3 / °K x mole
T = temperature of the gas mixture in °K

D_v [g / m^3] = p / 0.4615 x T

1 gr (grain) = 0.0648 g (gram)
1 cu ft = 0.0283168 m^3

D_v [gr / cu ft] = 0.437 x D_v [g / m^3]

Specific Humidity

The specific humidity (also known as mass concentration or moisture content of moist air) is the ratio of the mass M_v of water vapor to the mass ($M_v + M_a$) of moist air in which the mass of water vapor M_v is contained.

$Q = M_v / (M_v + M_a)$

$Q = p\ m_w / (p\ m_w + (P_b - p)\ m_a)$

Q [g / kg] = $1000\ p / (1.6078\ P_b - 0.6078\ p)$

1 gr (grain) = 0.0648 g (gram)
1 lb = 0.4535923 kg

Q [gr / lb] = 7 x Q [g / kg]

Mixing Ratio by Weight

The mixing ratio r of moist air is the ratio of the mass M_v of water vapor to the mass M_a of dry air with which the water vapor is associated:

$r = M_v / M_a$

$M_v = n \times m_w = m_w \times p\ V / RT$

$M_a = n \times m_a = m_a \times p_a\ V / RT = m_a \times (P_b - p) / RT$, where:

m_w = 18.016 gram
m_a = 28.966 gram
p = partial pressure of water vapor [Pa]
p_a = partial pressure of dry air [Pa]
P_b = total or barometric pressure [Pa]
R = 8.31436 Pa x m3 / °K x mole
T = temperature of the gas mixture in °K

$r = m_w\ p / m_a\ (P_b - p)$

$r = 621.97 \times p / (P_b - p)$ [g / kg]

1 gr (grain) = 0.0648 g (gram)
1 lb = 0.4535923 kg

r [gr / lb] = 7 x r [g / kg]

Enthalpy

The enthalpy (or energy content) of moist air at pressure P_b, temperature t (°C) and mixing ratio r (g/kg) is defined by:

h [kJ / kg moist] = 1.00464 t + 0.001846 r x t + 2.5 r

Note: by convention, the enthalpy of dry air (r = 0) at 0°C is equal to zero. Negative values of enthalpy are possible and indicate that the energy content of the air / vapor mixture is less than the energy content of dry air at 0°C

1 lb = 0.4536 kg
1 BTU = 1.05507 kJ

h [BTU / lb] = 0.4299 x h [kJ / kg] + 7.68

The value 7.68 is added to reference enthalpy in BTU / lb to the temperature of 0°F.

Appendix 5: Dew Point Accuracy

The HygroFlex M3 uses the relative humidity and temperature measurements to compute another parameter such as dew point, mixing ratio, enthalpy, etc. The accuracy of this conversion varies, depending on the humidity and temperature conditions. Typical accuracy for the dew point conversion is provided in the graph below:

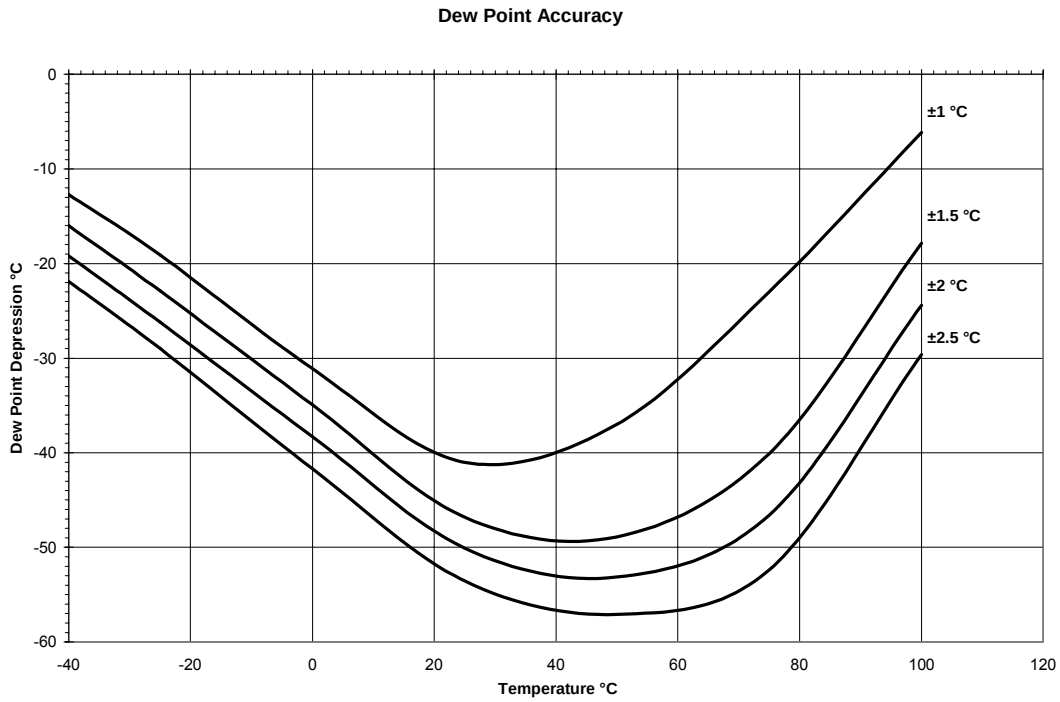

The accuracy of the dew point conversion is less than the accuracy that is normally achieved with a chilled mirror instrument. This is especially true at low dew point values (dew point depression of more than -40…-50°C) and at low temperatures. In many applications, repeatability is more critical than accuracy. Repeatability of the dew point conversion is typically 1/3 of the accuracy shown above.

Compared with a chilled mirror instrument, using a calculated dew point offers the advantage of less maintenance, higher tolerance to contaminants, no sampling system, no uncertainty between dew and frost and better response to fast changing conditions.

Appendix 6: RS232 Communication Protocol

The following describes the RS232 communication protocol that is used by the instruments from ROTRONIC when connected to the COM port of a PC. This information is provided for those customers who for some reason cannot use the HW3 software.

Connections

The exchange of data requires 3 wires: TXD (transmit), RXD (receive) and SG (signal ground).

RS232 Settings

Communication is done at the rate of 19200 bps. When there is a large amount of data to be exchanged (file read), the baud rate can be increased to 38400 bps.

In principle, only 7-bit ASCII characters (ASCII 32 to 127) are being used. The exception is File Read, where 8-bit characters are being used.

Normal settings:

Baud rate	: 19200
Parity	: even
Data bits	: 7
Stop bits	: 1
Flow Control	: none

Force incoming data to 7-bit ASCII.

Data Integrity

- 7-bit characters are sent with a parity bit. 8-bit characters are sent without parity bit.
- Strings (made of 7-bit characters) can be sent with or without checksum at the end of the string. When the checksum is not known – for example: when sending a command - the checksum is replaced by the } character at the end of the string.
- For the transmission of files (8-bit characters), we plan on using predefined initialization and end-of-communication sets of characters with a checksum.

Communication

Any communications program such as Windows HyperTerminal can be used to read the data on a PC screen. Communication with the instrument is always initiated from the PC. Any string sent from the PC should begin with the { character to start the synchronization. This should be followed by a 1-character product identification (see table below). The address is next (this is a 2-digit number between 00 and 31 used to distinguish between the different instruments, probes, functions etc. that are connected to the PC). The address is followed by a command and by any values or parameters that may be required to carry out the command. Use a carriage return (CR) to terminate the command string.

Example: {M00RDD} + CR (asks instrument M00 to send measurement data)

When several instruments are connected together (RS485 network), commands directed to instruments other than the instrument that is physically connected to the COM port of the PC should be preceded with the | character (ASCII 124)

Example: |{M01RDD} + CR

The instrument answers with a string beginning with the { character, the product identification and the address, followed by the command that was received and any data field that may have been requested by the command. This is followed by a checksum. The length of the string may vary, depending on how much data is included. Since the string itself does not include any information about its own length, a carriage return (CR) is always used to terminate the string.

Example: {M01RDD 0027.50;0067.17;0029.31;0064.27;#M (terminated with CR)

where:

{M01RDD : repeats the command + blank space

0027.50 : %RH – probe 1
; : separator
0067.17 : °F – probe 1 (temperature unit depends on instrument configuration with HW3)
; : separator
0029.31 : %RH – probe 2 (optional)
; : separator
0064.27 : °F – probe 2 (optional)
; : separator
#M : check sum

Note: Some instruments may insert the $ character at the second or third position of the string.

1-character Product Identification

ID	Product	Examples (the instrument will answer the following command)
a	A1H	{a00M} + CR
d	I3000, I3000S	{d00zY + CR – assuming the address is 0
d	BT-RS	{d02z] + CR
w	HygroWin	Not Applicable
x	MOK-Win	{x00M} + CR
0	HygroPalm 1	Not Applicable
u	HygroPalm 2	{u00RDD}+CR – assuming the address is 0
U	HygroPalm 3	{U00RDD}+CR – assuming the address is 0
1	HygroFlex 1 / M1	Not Applicable

m	HygroFlex 2	{m00RDD}+CR – assuming the address is 0
M	HygroFlex 3 / M3	{M00RDD}+CR – assuming the address is 0
2	HygroLab 1	Not Applicable
b	HygroLab 2	{b00RDD}+CR – assuming the address is 0
B	HygroLab 3	{B00RDD}+CR – assuming the address is 0
X	Reserved	{X00RDD}+CR – assuming the address is 0

CR=Chr(13)

Special Situations (single instrument)

Using address 99 in a data request causes instruments with any address to answer. For this reason, address 99 should not be used when several instruments are connected to a network. Address 99 can be useful when trying to communicate with a single instrument of unknown address. The address is returned as part of the answer string.

When the product ID is unknown, it can be replaced with a blank in the command. The product ID is returned as part of the answer string.

Example: { 99RDD}+CR

Examples

Data can be read from the instrument directly connected to the COM port of the PC (RS232) as well as from any instrument that is networked (RS485). The following examples are for the HygroFlex. The same commands can be used for other instruments with similar capabilities by substituting the appropriate values for the product ID and address.

1) read %RH and temperature from the HygroFlex M3 (with 1 probe) address 01, directly connected to the PC COM port (RS232):

data request: {M01RDD}+CR

answer: {M01RDD 0025.01;0016.89;----.--;----.--;#C

note: 0025.01: humidity (%RH)
0016.89: temperature probe (°C as per instrument configuration)

2) read %RH, temperature and computed parameter

data request: {M01RDD0;}+CR

answer: {M01RDD 0025.90;0015.82;-003.69;----.--;----.--; ----.--;S

note: 0025.90: humidity (%RH)
0015.82: temperature (°C as per instrument configuration)
-003.69: dew point (°C as per instrument configuration), etc.

3) read %RH and temperature from the HygroFlex M3 (1 probe) with address 00, connected by RS485 to another HygroFlex M3:

data request |{M00RDD} +CR note the | character (ASCII 124) preceding the command

answer: {M00RDD 0020.41;0019.87;----.--;----.--;#E

note: 0020.41: humidity (%RH)
0019.87: temperature (°C as per instrument configuration), etc..

Appendix 7: Accessories for the HygroFlex M

Order Code	Description
HW3	HW3 software (CD ROM)
MOK-03-WIN	Calibration cable for the HygroClip S3 probe (requires PC with HW3 software)
HygroPalm 3	HygroPalm 3, probe calibrator (when no PC is available)
AC1623	Cable service connector (MTA connector on HygroFlex PCB) to PC. Used to configure the HygroFlex with the HW3 software.
AC1620-P	Cable test connector (connector on HygroFlex PCB) to HygroPalm 3. Used to read the HygroFlex and access the HygroFlex internal functions.
EA00-SCS	0%RH humidity std, SCS cert., pack of 5
EA05-SCS	5%RH humidity std, SCS cert., pack of 5
EA10-SCS	10%RH humidity std, SCS cert., pack of 5
EA11-SCS	11%RH humidity std, SCS cert., pack of 5
EA20-SCS	20%RH humidity std, SCS cert., pack of 5
EA35-SCS	35%RH humidity std, SCS cert., pack of 5
EA50-SCS	50%RH humidity std, SCS cert., pack of 5
EA65-SCS	65%RH humidity std, SCS cert., pack of 5
EA75-SCS	75%RH humidity std, SCS cert., pack of 5
EA80-SCS	80%RH humidity std, SCS cert., pack of 5
EA95-SCS	95%RH humidity std, SCS cert., pack of 5
ER-15	calibration device for HygroClip S3 probe
A-HFM	Mounting adapter used to attach the HygroFlex M enclosure to a 1 to 2” diameter pole.
RS41202-7	10-plate radiation shield for the HygroClip S3 probe (mounting hardware included). Suitable for a 1 to 2” diameter pole.

A-HFM Mounting Plate