H260
HUMIDITY TRANSMITTER

INSTRUCTION MANUAL

CONTENTS

PLEASE, READ THIS FIRST

- Check the product for any physical damage that may have occurred during shipment. We carefully pack and routinely insure all shipments. If any damage has occurred, it is your responsibility to file a claim with the carrier, **prior to returning the damaged product**. Please note that our warranty does not cover damage during shipment.

- Prior to installation, get fully familiarized with the operating limits of the product and with the installation instructions provided in this manual.

- Do not unnecessarily remove the sensor protection (dust filter or slotted cap) from the probe. Both sensors (humidity and temperature) can be mechanically damaged by careless removal of the protection. The ROTRONIC HYGROMER™ humidity sensor looks like a small white paper tag. Do not remove from the probe!

Each ROTRONIC instrument is carefully calibrated before shipment. No further adjustments should be required before installation. If you have any question or problem, please call our service department at 631/427-3898 and press 5 (or ask for extension 21).

DESCRIPTION

The H260 humidity transmitter was specifically designed for OEM applications that require humidity measurement in dryers, ovens, incubators, environmental test chambers, etc.

The H260 features the ROTRONIC HYGROMER™ C92 capacitive humidity sensor. This well proven sensor offers exceptional durability and stability in all kinds of industrial environments. This fact is reflected in the 3-year full warranty that covers the H260. Reliability is further enhanced by the easy-to-perform field calibration. Measurement accuracy and fast response are provided over the entire range of humidity conditions, even when the sensor is exposed to extremely high or low humidity over long periods of time. The C92 humidity sensor was designed for applications where the normal temperature range is -5 to 320°F (-20 to 160°C) and survives exposure to temperatures in the range of -100 to 390°F (-75 to 200°C). This sensor requires a compensation for the effect of temperature on accuracy.

OPERATION

1. Power Supply

The H260 humidity module can operate with an unregulated supply voltage between 10 and 30 VDC and requires 15 mA.

2. Output Range

The range of the linearized relative humidity output is 0 to 5 VDC = 0 to 100%RH.

3. Temperature Operating Range and Temperature Limits

The H260 transmitter can operate within 20 to 122°F (-5 to 50°C) at the electronics.

The H260 survives temperatures at the sensors within the limits of -100 to 390°F (-75 to 200°C). However, accuracy of humidity measurement is not warranted outside of the temperature operating range of -5 to 320°F (-20 to 160°C). Therefore, the H260 should not be used in applications where temperature is normally higher than 320°F (160°C) or lower than -5°F (-20°C).

Operating the H260 transmitter and/or its probe outside of the temperature limits can result in permanent damage.

4. Humidity Limits

As far as possible, avoid sudden condensation at the sensors. When measuring at high humidity, condensation may occur on the humidity sensor due to a sudden difference in temperature with the environment. This does not damage the sensor. However, this will produce an overflow reading (an output signal of more than 100 %RH) for as long as condensation is present on the humidity sensor.

Depending on temperature, the maximum humidity to which the probe can be subjected is as follows:

- 100 %RH up to 185°F (85°C)
- 90 %RH at 212°F (100°C)
- 60 %RH at 260°F (125°C)
- 25 %RH at 320°F (160°C)

Exceeding the above limits may "shift" the humidity sensor and require a new calibration.

5. Temperature Compensation

Practically every make of relative humidity sensor requires a compensation for the effect of temperature on the humidity output signal in order to measure accurately over a wide range of temperature conditions. In the specific case of an instrument using a capacitive sensor, compensation is required because the dielectric characteristics of both the water molecule and the hygroscopic polymer used in the sensor vary with temperature.

A temperature signal is required to compensate the H260. Compensation can be done by adding to the humidity output signal a correction which depends both on humidity and temperature.

%RH = %RHo + %Corr, where %RHo is the output provided by the H260 transmitter.

Assuming that the H260 was calibrated at a temperature close to 20°C (68°F), the value of **%Corr** depends both on humidity and temperature and can be computed as follows:

Note: in the following equations, T is the temperature at the humidity sensor in °C, RHo is the humidity output of the H260 in %RH, and Corr is the correction to be added to RHo in %RH.

a) Temperature Range: below +20°C

$$\mathbf{Corr = (T\text{-}20) \times [0.38 \times 0.01RHo - 0.25 \times (0.01RHo)^2]}$$

b) Temperature Range: 20 to 120°C

$$\mathbf{Corr = (T\text{-}20) \times [0.42 \times 0.01RHo - 0.324 \times (0.01RHo)^2]}$$

c) Temperature Range: above 120°C

$$\mathbf{Corr = [0.215 \times (T\text{-}20) + 20.8] \times 0.01RHo - [0.15 \times (T\text{-}20) + 17.4] \times (0.01RHo)^2}$$

The following table provides the value of Corr at different values of humidity and temperature. The shaded areas of the table corresponds to conditions that are either not within the operating limits of the H260 or not physically possible. **An example of an analog circuit is available from RIC**.

H260 Humidity Transmitter: TEMPERATURE CORRECTION

Temp.°C	-40	-20	0	20	40	60	80	100	120	140	160	180
Del T °C	-60	-40	-20	0	20	40	60	80	100	120	140	160
RHo												
0%	0.0%	0.0%	0.0%	0.0%	0.0%	0.0%	0.0%	0.0%	0.0%	0.0%	0.0%	0.0%
2.5%	-0.6%	-0.4%	-0.2%	0.0%	0.2%	0.4%	0.6%	0.8%	1.0%	1.1%	1.2%	1.4%
5%	-1.1%	-0.7%	-0.4%	0.0%	0.4%	0.8%	1.2%	1.6%	2.0%	2.2%	2.4%	2.7%
8%	-1.7%	-1.2%	-0.6%	0.0%	0.6%	1.3%	1.9%	2.5%	3.2%	3.5%	3.8%	4.2%
10%	-2.1%	-1.4%	-0.7%	0.0%	0.8%	1.6%	2.3%	3.1%	3.9%	4.3%	4.7%	5.1%
20%	-4.0%	-2.6%	-1.3%	0.0%	1.4%	2.8%	4.3%	5.7%	7.1%	7.9%	8.6%	9.4%
30%	-5.5%	-3.7%	-1.8%	0.0%	1.9%	3.9%	5.8%	7.7%	9.7%	10.8%	11.8%	12.8%
35%	-6.1%	-4.1%	-2.0%	0.0%	2.1%	4.3%	6.4%	8.6%	10.7%	12.0%	13.1%	14.2%
40%	-6.7%	-4.5%	-2.2%	0.0%	2.3%	4.6%	7.0%	9.3%	11.6%	13.0%	14.2%	15.5%
50%	-7.7%	-5.1%	-2.6%	0.0%	2.6%	5.2%	7.7%	10.3%	12.9%	14.5%	15.9%	17.3%
60%	-8.3%	-5.5%	-2.8%	0.0%	2.7%	5.4%	8.1%	10.8%	13.5%	15.2%	16.7%	18.2%
70%	-8.6%	-5.7%	-2.9%	0.0%	2.7%	5.4%	8.1%	10.8%	13.5%	15.3%	16.8%	18.4%
80%	-8.6%	-5.8%	-2.9%	0.0%	2.6%	5.1%	7.7%	10.3%	12.8%	14.6%	16.1%	17.7%
90%	-8.4%	-5.6%	-2.8%	0.0%	2.3%	4.6%	6.9%	9.2%	11.5%	13.3%	14.7%	16.1%
100%	-7.8%	-5.2%	-2.6%	0.0%	1.9%	3.8%	5.7%	7.7%	9.6%	11.2%	12.5%	13.8%

6. Sensor Protection

With the exception of environmental test chambers and other "clean" applications, we recommend using a dust filter (supplied as a standard) to protect the sensors.

Because conditions in an environmental chamber can be made to change rapidly and require the fastest possible response from the probe, it is often preferable to use a slotted cap (available from ROTRONIC) as opposed to using a dust filter.

Never use the H260 without protecting the sensors with either a filter or a slotted cap.

7. Grounding

Operation of the H260 does not require that the unit be electrically grounded. However, we recommend grounding the instrument, especially if the electronic circuits are subjected to a low humidity environment (less than 35 %RH).

8. Optional Temperature Sensor

The probe of the H260 has a 6-pin bulkhead. Two of these pins are used for the humidity sensor, the other pins are free and can be used to add a temperature sensor to the probe. When the pins are not used, the wires that are connected to these pins are soldered to the board to four grounded pads labeled GND1 to GND4. These wires can be unsoldered from the board to connect the temperature sensor to another circuit.

INSTALLATION

- **Do not remove the dust filter or slotted cap from the probe. The sensor can easily be damaged when not protected.**
- **The ROTRONIC HYGROMER™ humidity sensor has the appearance of a small white paper tag. Do not remove from the probe!**

A) Mechanical Installation

1. General Recommendations

Relative humidity is extremely dependent on temperature. Proper measurement of relative humidity requires that the probe and its sensors be at exactly the temperature of the environment to be measured. Because of this, the location where you choose to install the probe can have a dramatic effect on the performance of the instrument. The following guidelines should guarantee good instrument performance:

a) **Select a representative location**: install the probe where humidity, temperature and pressure conditions are representative of the environment to be measured.
b) **Provide good air movement at the probe**: air velocity of at least 200 ft/ minute (1 meter/second) facilitates adaptation of the probe to changing temperature.
c) **Avoid the following:** (1) Close proximity of the probe to a heating element, a cooling coil, a cold or hot wall, direct exposure to sun rays, etc. (2) Close proximity of the probe to a steam injector, humidifier, direct exposure to precipitation, etc. (3) Unstable pressure conditions resulting from excessive air turbulence.
d) **Immerse as much of the probe as possible in the environment to be measured.**

2. Probe Installation

Probe Holder

For installation through a wall, we recommend using a probe holder mod. QMA-15. This holder is a mounting flange that is equipped with a compression fitting.

Immersion Depth (Through Wall)

For through wall installation make sure that 9 to 9 1/2" (230-240mm) are immersed in the environment to be measured (see diagram at the end of this manual). Probe immersion depth is critical. Insufficient probe immersion may result in a difference between the temperature of the sensors and that of the environment. This will create a large error of measurement and/or a malfunction.

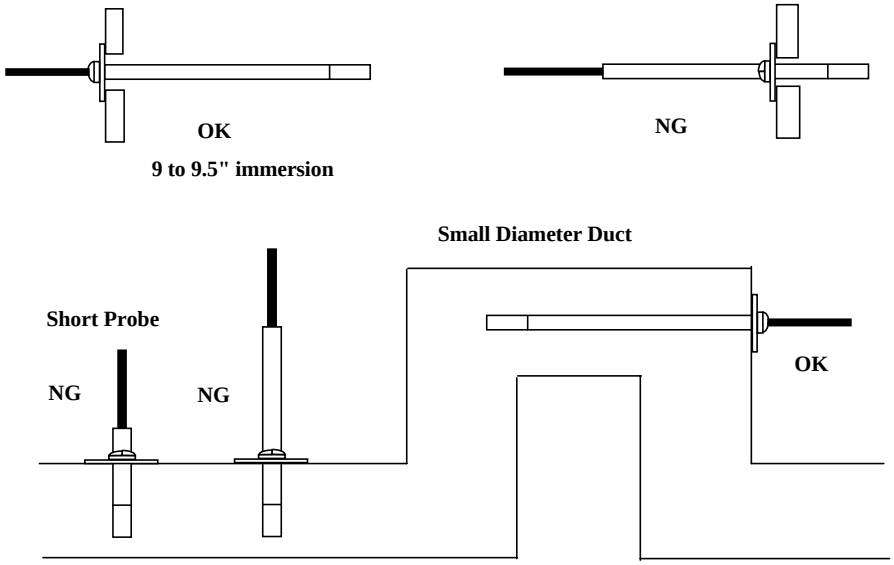

Probe Position

Install the probe so as to prevent the accumulation of condensation water at the level of the sensor leads. Install the probe so that the probe tip is looking downward. If this is not possible, install the probe horizontally.

Calibration Access Orifice (Through-Wall Probe Installation)

If the H260 is going to be used for an application where humidity and temperature conditions are fairly constant, future maintenance may be greatly facilitated by providing a calibration access orifice next to the probe to permit the use of a calibrator.

RIC can provide a calibrator (reference instrument) with a probe having dimensions similar to the probe of the H260. Therefore, the calibration access orifice should have the same size as the orifice used to install the probe. We recommend that this orifice be equipped with a QMA-15 probe holder.

B) ELECTRICAL INSTALLATION

Make sure that you can correctly identify the function of each terminal (see label inside enclosure cover). Applying power to the output terminals can severely damage the transmitter.

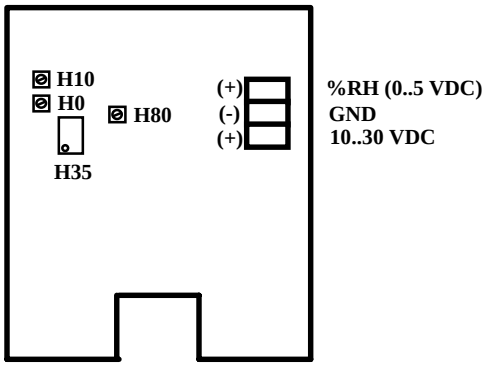

1. Maximum Cable Length

The current consumption of the H260 is less than 15 mA. This current flows through the GND wire which is common to the output signal and the supply voltage. With a 12 AWG wire, the maximum cable length should not exceed 20 to 25 feet in order to minimize the error created by the voltage drop in the common (GND) wire.

2. Where to run the Cable

Avoid running the cable connecting the unit in the same conduit as 110 VAC power cables. If this cannot be avoided, a shielded cable or a cable with twisted wires may be required to prevent interferences due to electromagnetic induction.

3. Grounding

We generally recommend grounding, especially if the electronics will be subjected to a low humidity environment (35 %RH or less).

MAINTENANCE

1. Cleaning or Replacing the Dust Filter:

The dust filter should be cleaned from time to time, depending on the conditions of measurement. Cleaning should be done without removing the filter from the probe. Gently wipe the filter with a solution of water and mild detergent. If this does not remove most of the stains, the filter should be replaced. To do this, unscrew the filter from the probe.

Before putting on a new dust filter, check the alignment of both sensors with the probe. The wires that connect the sensors to the probe are very thin and bend easily. If this happens, correct the alignment by holding the sensor very gently with a pair of small flat nosed pliers.

2. Periodic Calibration Check:

When the probe is operated within the range of -100 to 320°F (-70 to 160°C), long term stability of the humidity sensor is typically better than 1 %RH per year. For maximum accuracy, calibration of the unit may be verified every 6 to 12 months.

Applications where the unit is exposed to temperatures above 320°F (160°C) or to significant pollution may require more frequent verifications. The calibration procedure is described in detail in this manual.

CALIBRATION BASICS

When calibrating humidity, **temperature stability is the single most important requirement**. Do not run the full humidity calibration process unless the probe is at room temperature (20 to 25 °C) and this temperature is stable to ±0.25°C or better during the period of time required for each calibration point. Do not calibrate close to an air vent or a heater, in direct exposure to sun rays, etc. If necessary during calibration, place the tip of the probe and calibration device inside an insulating box filled with sand.

1. Calibration Device:

The calibration device ER15 fits the probe of the H260. This calibration device is a small airtight container that slips over the probe and seals around the humidity sensor. During calibration, a known reference humidity is produced inside the calibration device by means of a humidity standard (usually an aqueous salt solution).

2. Humidity Standards:

RIC humidity standards permit calibration by non-skilled personnel. These standards are available in boxes of 5 glass ampoules of the same value, which can be stored indefinitely. Standards in the range of 5 to 95 %RH are non-saturated aqueous salt solutions that are precisely titrated at our factory for the right concentration. The 0 %RH humidity standard is made of small granules of a highly porous ceramic that have been dried at a high temperature. A Material Safety Data Sheet is available for each standard. Since humidity standards other than the 0 %RH standard are a salt solution, parts which have come in contact with the liquid should be cleaned after each use.

3. Calibration Potentiometers and Test Pins

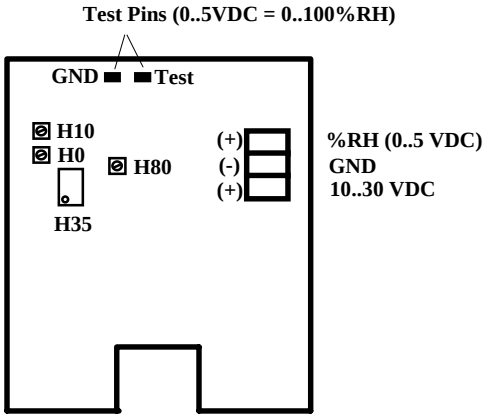

ONE-POINT HUMIDITY CALIBRATION

When the requirement is to provide accurate measurements over a narrow range of conditions, a one-point calibration is appropriate. This is typical of many applications in the area of process control. The advantage of the one-point calibration is that it can be done on site, in very little time.

The method of calibration consists in adjusting the output of the H260 against the output or display of a reference instrument (calibrator). The output of the H260 can be read without interrupting the signal by connecting a voltmeter to the Test and Ground pins located on the board (see calibration potentiometers and test pins).

1. Conditions of Validity:

To be valid, a one-point calibration must meet the following requirements:

- The humidity and temperature conditions that are prevalent during calibration must be reasonably stable. Over a period of 15 min., temperature should not vary by more than 1°F (0.5°C).

- The probe of both instruments must be ventilated or placed in the same stream of moving air. Air velocity must be at least 200 ft/min (1m/s).

  Usually, it is temperature equilibrium that takes the longest time. Depending on the initial conditions, equilibration can take from a few minutes to as long as 15..20 minutes. If the initial temperature difference between the two probes is more than a few degrees, be sure to wait at least 15 min. before calibrating.

2. Calibration Sequence

- Connect a voltmeter to the (+) TEST and (-) GND test pins.
- Adjust the **H35** potentiometer so that the voltmeter reads a signal corresponding to the reading provided by the reference instrument.

FULL CALIBRATION

Full calibration of the H260 series requires a 4-point calibration of humidity.

If the temperature signal used for compensating the H260 requires calibration, this must be done prior to humidity calibration and should always be followed by a humidity calibration.

Humidity Calibration should be done exactly in the sequence indicated in this manual. The first calibration adjustment should be at 35 %RH or at a value close to that.

- Slip the calibration device on the probe and make sure it seals tightly on the probe. The receptacle of the calibration device (or solution holder) should be under the sensors. Remove the receptacle from the calibration device.
- Connect a voltmeter to the (+) TEST and (-) GND test pins.
- Set the H80 potentiometer in mid position.
- Place one fiber disc (each box of RIC humidity standards includes 5 discs) in the receptacle of the calibration device. The purpose of this disc is to prevent accidental spilling of the solution inside the calibration device or on the humidity sensor.
- Tap the top of one ampoule of 35 %RH solution so that all liquid drops to the bottom of the ampoule. Snap off top and empty contents on fiber disc. **Since the ampoule is made of glass, exercise proper caution (gloves, safety glasses) when snapping off the top.**
- Put the receptacle back on the calibration device and make sure that the solution does not come in contact with the sensor: **The solution inside the calibration device should never be on top of the sensors.**
- Allow at least 60 minutes to insure that the calibration device, the solution and the sensor are in a state of equilibrium. This is verified by monitoring the voltmeter.
- At equilibrium (stable output signal), adjust the reading of the voltmeter with the H35 potentiometer.
- Remove the receptacle from the calibration device. Throw away the wet disc (non reusable). **Thoroughly wash and dry the receptacle, removing all traces of the humidity standard.**

Use 80 %RH as the second calibration value as this provides the best overall accuracy over the full range of measurement.

- Repeat the procedure used for the 35 %RH adjustment with an 80 %RH standard. Allow at least 60 minutes for equilibrium.
- At equilibrium, adjust the probe output with the H80 potentiometer
- Remove the receptacle from the calibration device and clean thoroughly.

The low humidity calibration is the last step of the calibration sequence.

- Repeat the procedure used before first with a 10%RH and after this with a 0 %RH standard. Allow each time at least 90 minutes for equilibrium.
- At equilibrium, adjust the probe output with the H10 potentiometer (10 % standard) or with the H0 potentiometer (0 % standard).
- Carefully remove the calibration device from the probe (pay attention not to catch the unprotected sensors). Put the dust filter back on the probe. Thoroughly clean the receptacle.

SPECIFICATIONS

Humidity Sensor	ROTRONIC HYGROMER™ C92
Operating Temperature at Electronics	20..122°F (-5..50°C)
Humidity Measuring Range	0..100 %RH
Temperature Limits at Sensors	-100 to 390°F (-75 to 200°C)
Humidity Limits at Sensors	100%RH up to 185°F (85°C) 90%RH at 212°F (100°C) 60%RH at 260°F (125°C) 25%RH at 320°F (160°C)
Output Signal (linear)	0..5VDC (min. load 1000 Ω)
Accuracy at 68..77°F (20..25°C)	± 1%RH from 0 to 100%RH*
Repeatability	± 0.3%RH
Humidity Sensor Stability	better than 1%RH over a year
Response Time (without filter)	10 seconds
Calibration Potentiometers	35, 80, 10 and 0%RH
Supply Voltage	10-30VDC/15 mA
Electrical Connections	3 Wires / Terminals 12 AWG
Probe Cable Length	5 feet (1.5 meter)
Sensor Protection	Dust Filter (standard)/ Slotted Cap (Optional)
Probe Dimension/Material	10.5 x 0.59" (267 x 15 mm) / PPS
Weight	0.45 lbs (200g)
Probe Holder	QMA15 (Order Separately)
Calibration Device	ER15 (Order Separately)

*) When calibrated against highest quality reference standards. Both factory calibration and field calibration with ROTRONIC standards result in ±1.5%RH accuracy or better.

Modifications Reserved