HC321A-W / HC321A-R

DEW POINT / TEMPERATURE TRANSMITTER

INSTRUCTION MANUAL

CONTENTS

PLEASE, READ THIS FIRST

- Check the product for any physical damage that may have occurred during shipment. We carefully pack and routinely insure all shipments. If any damage has occurred, it is your responsibility to file a claim with the carrier, **prior to returning the damaged product**. Please note that our warranty does not cover damage during shipment.

- Prior to installation, get fully familiarized with the operating limits of the product and with the installation instructions provided in this manual.

- Do not unnecessarily remove the sensor protection (dust filter or slotted cap) from the probe. Both sensors (humidity and temperature) can be mechanically damaged by careless removal of the protection. The ROTRONIC HYGROMER™ humidity sensor looks like a small white paper tag. Do not remove from the probe!

Each ROTRONIC instrument is carefully calibrated before shipment. No further adjustments should be required before installation. If you have any question or problem, please call our service department at 631/427-3898 and press 5 (or ask for extension 21).

1. OVERVIEW

The HC321A is a microprocessor based transmitter that computes dew point from the measurements provided by a capacitive relative humidity sensor HYGROMER™ C80 and a Pt100 RTD temperature sensor. Instead of dew point, the HC321A can be factory set to compute one of the following: wet bulb temperature, humidity ratio (absolute humidity) or enthalpy (energy content) of the air being measured.

The HC321A has two analog outputs: one for the computed parameter (dew point), the other for temperature or relative humidity. Both outputs are factory set to the range and engineering units specified when ordering. The HC321A also features a dual LED display.

The HC321A is available in two basic configurations:

HC321A-W : with integral probe, for wall installation (surface mount)
HC321A-R: with remote probe (6 Ft of cable) for through wall installation.

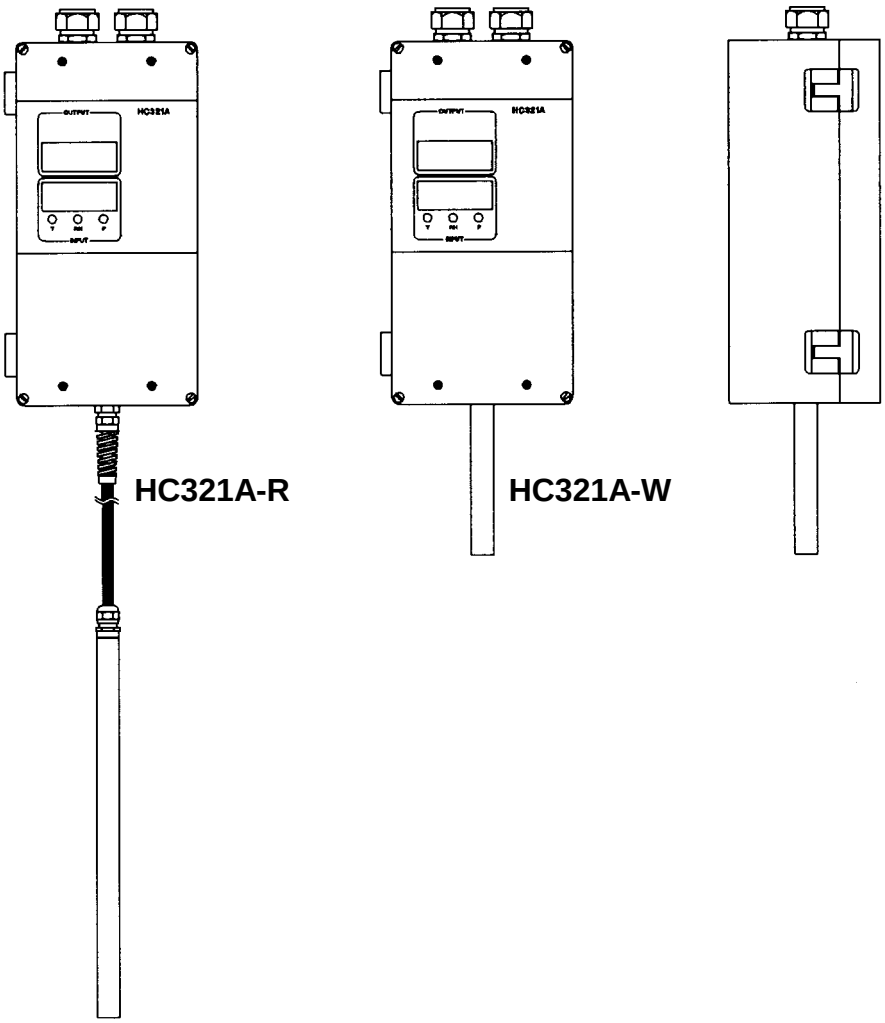

2. OPERATING LIMITS

OPERATING THE HC321A OUTSIDE OF THE SPECIFIED LIMITS MAY RESULT IN INACCURATE MEASUREMENTS AND IN PERMANENT DAMAGE TO THE INSTRUMENT.

2.1 Temperature Limits at the Electronics

During operation, do not expose the enclosure of the HC321A to temperatures outside of the range of -29 to 55°C (-20 to 131°F).

2.2 Operating Limits

Both the humidity and temperature sensors of the HC321A can survive a wide range of conditions. Accuracy of the conversion of relative humidity into another parameter (dew point or other) tends to deteriorate at extreme conditions. Please, refer to the diagrams of chapter 8. For control applications, it is of interest to note that repeatability remains good even at extreme conditions.

a) Temperature limits at the Sensors

MODEL	SURVIVAL LIMITS	NORMAL OPERATING RANGE
HC321A-W	-29..55°C (-20..131°F)	-20..50°C (-5..122°F)
HC321A-R	-75..160°C (-100..320°F)	-20..120°C (-5..248°F)

b) Humidity Limits at the Sensors

Avoid sudden condensation at the sensors. At high humidity conditions, condensation may form on the humidity sensor due to a sudden temperature difference with the environment. This does not damage the sensor. Condensation will cause the humidity reading to be stuck at 100%RH for as long as it is present. In extreme situations, the humidity and temperature sensor could be short circuited. This may make temperature go to the maximum of its range. Depending on temperature, the maximum humidity to which the probe can be subjected is as follows (see also the diagrams of chapter 8):

- 100 %RH up to 85°C (185°F)
- 90 %RH at 100°C (212°F)
- 60 %RH at 125°C (260°F)
- 25 %RH at 160°C (320°F)

Exceeding the above limits may "shift" the humidity sensor and require a new calibration.

2.4. Sensor Protection

With the exception of environmental test chambers and other "clean" applications, we recommend using a dust filter (standard) to protect the sensors.

Because conditions in an environmental chamber can be made to change rapidly and require the fastest possible response from the probe to avoid condensation on the sensors, it is often preferable to use a slotted cap (available from ROTRONIC) as opposed to using a dust filter. The slotted cap should be equipped with a screen insert to limit air velocity at the sensors.

Never use the HC321A transmitter without protecting the sensors with either a filter or a slotted cap.

3. INSTALLATION

- **Prior to installing the HC321A, you should make sure that you are familiar with the operating limits specified in chapter 2.**
- **The HC321A is available in many different combinations of power supply, output signals, ranges, etc. Please, read the label located on the side of the enclosure for the specifications of the unit that you are installing.**
- **Do not remove the dust filter or slotted cap from the probe. Both sensors can easily be damaged when not protected. The ROTRONIC HYGROMER™ humidity sensor has the appearance of a small white paper tag. Do not remove from the probe!**

3.1 General Guidelines

Relative humidity is extremely dependent on temperature. Proper measurement of relative humidity requires that the probe and its sensors be at exactly the temperature of the environment to be measured. Because of this, the location where you choose to install the probe can have a dramatic effect on the performance of the instrument. The following guidelines should guarantee good instrument performance:

a) **Select a representative location**: install the probe where humidity, temperature and pressure conditions are representative of the environment to be measured.
b) **Provide good air movement at the probe**: air velocity of at least 200 ft/ minute (1 meter/second) facilitates adaptation of the probe to changing temperature.

c) **Avoid the following:** (1) Close proximity of the probe to a heating element, a cooling coil, a cold or a hot wall, direct exposure to sun rays, etc. (2) Close proximity of the probe to a steam injector, humidifier, direct exposure to precipitation, etc. (3) Unstable pressure conditions resulting from excessive air turbulence.

d) **Immerse as much of the probe as possible in the environment to be measured.**

3.2 Installation of the Enclosure

Select a location where temperature does not exceed 122°F (50°C).

The enclosure is designed for wall (surface) installation. To gain access to the 4 mounting holes, loosen the 4 screws located on the front panel (one at each corner). Before opening, pull the cover away from the enclosure to free the hinges (see drawing). The hinges will not pivot unless they are free. The 4 mounting holes are separated from the inner compartment of the enclosure. A screw size of 6/32” is appropriate.

If the surface of the mounting wall is at a temperature of more than 100°F, use an insulating spacer (not provided) between the transmitter enclosure and the wall or duct. This spacer should be at least 1" thick.

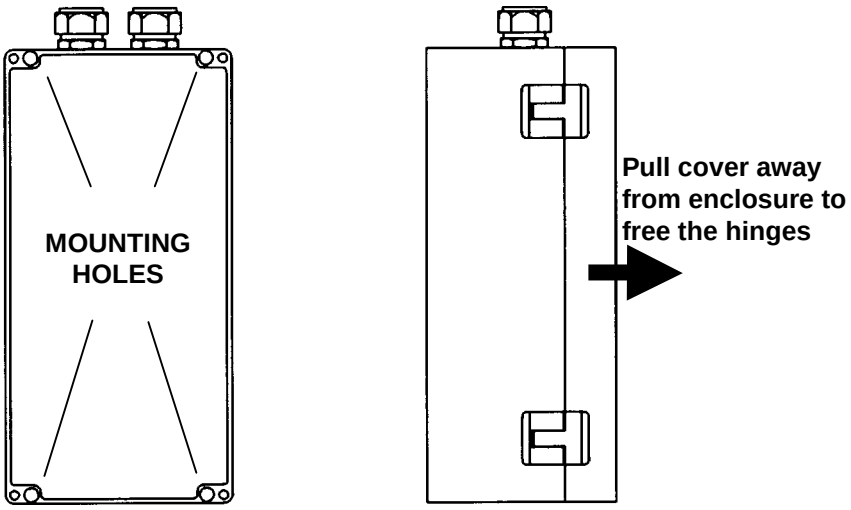

3.3 Remote Probe Installation (HC321A-R)

The remote probe of the HC321A-R is designed for through wall installation.

a) Probe Holder

We recommend using a probe holder mod. QMA-15 (order separately). This holder is a mounting flange that is equipped with a compression fitting.

b) Immersion Depth

Make sure that 9 to 9.5" (230-240mm) are immersed in the environment to be measured. Insufficient probe immersion may cause the temperature of the sensors to be different from that of the sensors environment. A temperature difference can create a large error of measurement and/or a malfunction (condensation on the sensors).

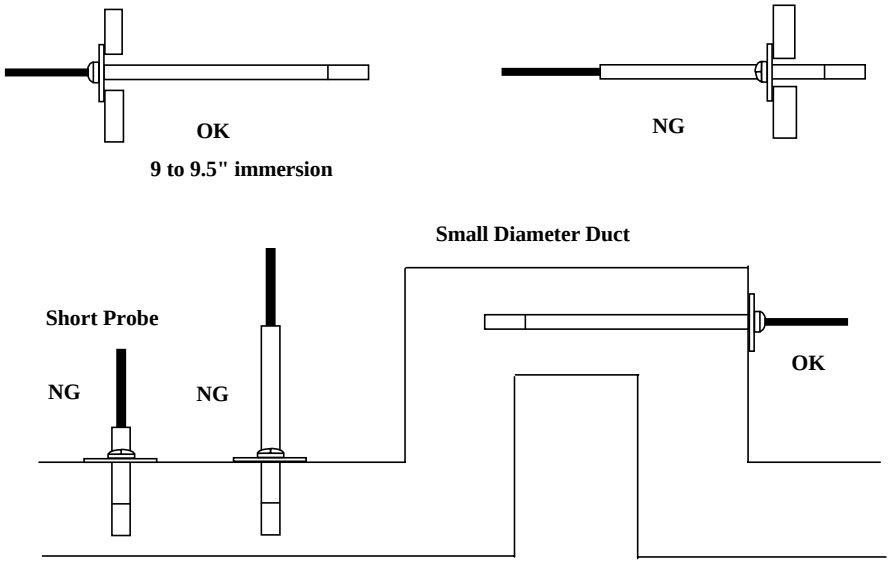

c) Probe Position

Install the probe with tip of the probe looking downward or install the probe horizontally. Proper probe position prevents the accumulation of condensation water at the level of the sensor leads.

d) Calibration Access Orifice

When the humidity and temperature conditions of the application tend to be fairly stable, future maintenance (calibration checks) may be greatly facilitated by providing a calibration access orifice 3.5 to 4” away from the probe to permit the insertion of a portable reference probe. The calibration access orifice should have the same diameter as the orifice used to install the probe. We recommend that this orifice be equipped with a QMA-15 probe holder and a stopper.

Battery operated indicators and probes are available from RIC (see chapter 6 for more details).

3.4 Wiring

Make sure that you can correctly identify the function of each terminal. Applying power to the output terminals can severely damage the transmitter.

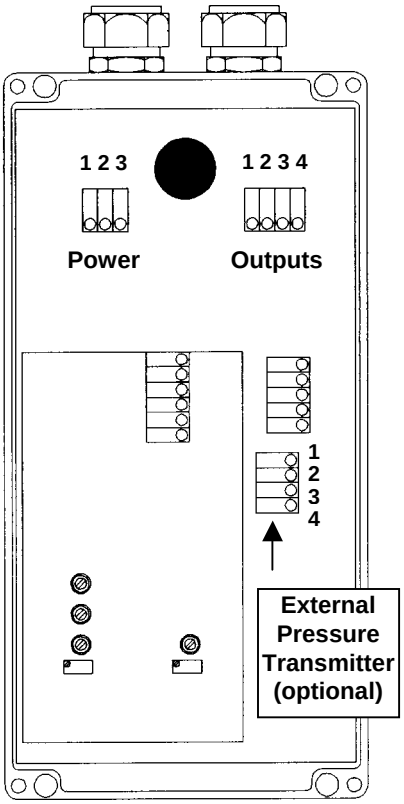

POWER (see label on enclosure)

a) 24VDC or 24VAC (no transformer)

1: (+)
2: (-) or GND
3: Not Used

b) 110 or 220VAC (transformer)

1: Phase
2: Neutral
3: 3d Wire or GND

OUTPUTS (see label on enclosure)

1: (+)
2: (-) **Temperature, %RH or Pressure**
3: (+)
4: (-) **Computed Output (Dew Point or other)**

DO NOT GROUND CURRENT OUTPUTS!

PRESSURE TRANSMITTER (optional)

1: (-)
2: internally connected with 3
3: internally connected with 2
4: (+)
See Paragraph e)

a) Conduit Adapters

The standard HC321A is supplied with two 1/2” conduit adapters. If only one conduit adapter is being used, make sure to seal the other one.

Avoid running the cables connecting the unit in the same conduit as 110 VAC power cables. If this cannot be avoided, a shielded cable or a cable with twisted wires may be required to prevent interference due to electromagnetic induction caused by switching.

b) Connecting Cables

Preferably, use cables with 18 AWG wires. Depending on the installation, you may have to use a cable with twisted pairs for the signals or a shielded cable to avoid interference.

c) Maximum Cable Length

In order to determine the maximum length of cable that can be used to connect the transmitter to other devices, you should know the resistance per unit of cable length.

. Current outputs: the maximum permissible cable length, connecting the unit to other devices, is determined by the total resistance resulting from the addition of the cable resistance and that of the devices connected in series with the unit. This resistance should not exceed 500 ohms.

. Voltage outputs: the maximum cable length can be determined under consideration of the voltage drop caused by the current flowing to the devices connected to the unit. The voltage drop in the cable depends both on cable resistance and on the equivalent resistance of the devices connected in parallel to the unit. The total resistance connected to each unit output must at least be equal to 100 kohms. Cable resistance should not be more than 1/1000 of the load resistance.

d). Grounding

Grounding of the HC321A should be done at the power supply.

We generally recommend grounding the HC321A, especially if the electronics will be subjected to a low humidity environment (35 %RH or less).

WARNING!!!

If the HC321A has current outputs, the outputs **will be severely damaged** if directly grounded or if connected to a device that is referenced to ground.

e) Optional Pressure Transmitter

As an option, the HC321A can be equipped with a terminal block to accept the output signal of an external pressure transmitter. A label located on the outside of the enclosure provides information as to the type of signal (current or voltage), the range and engineering unit (PSIA or other) for which the HC321A was factory set.

The following diagram shows how to wire the external pressure transmitter:

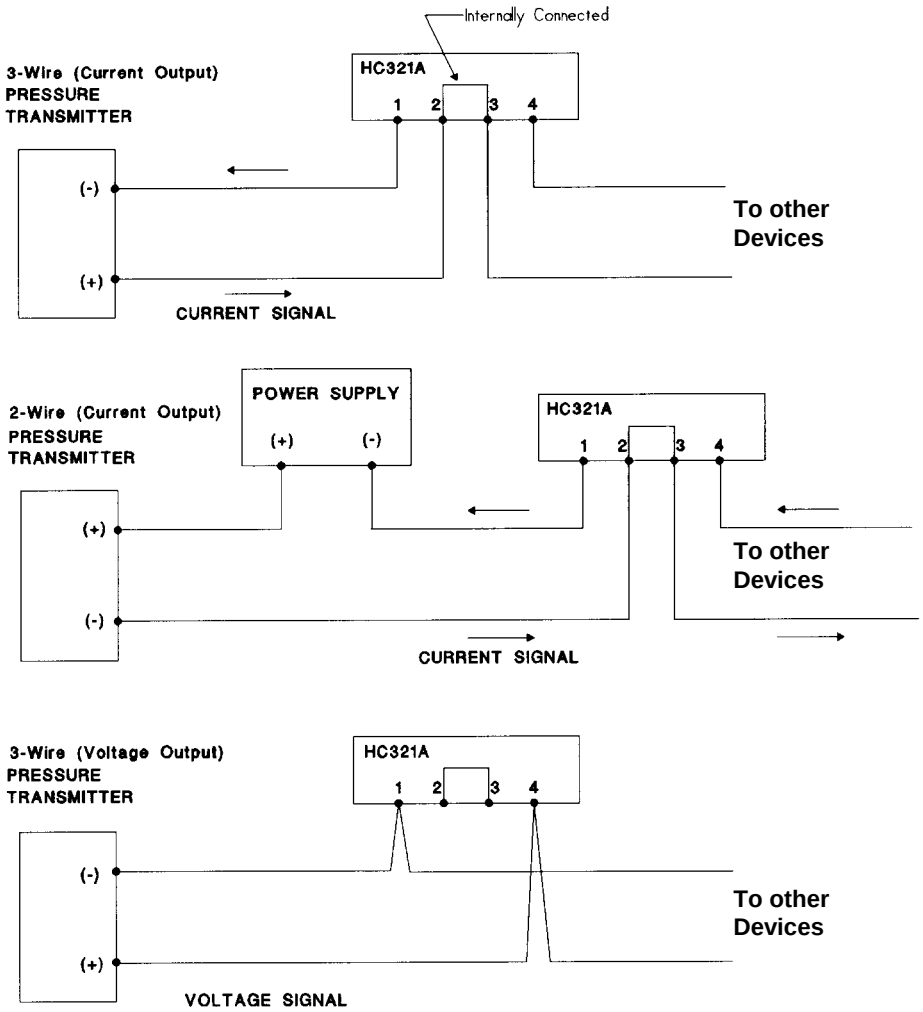

Note: In the case of a current signal, the HC321A must be the last device in the pressure current loop.

4. OPERATION

Upon power up, the HC321A is immediately ready to operate. For correct readings, allow the probe to come to temperature equilibrium with the environment to be measured.

The HC321A was factory set according to the specifications provided when ordering. These setting are not user selectable. A label located on the side of the enclosure provides details on the configuration of the HC321A: computed parameter (dew point or other), type of output signals (4..20mA or other), range and engineering unit of each parameter.

4.1. Display

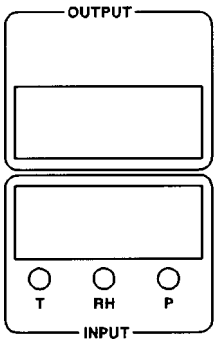

The top 4-digit LED display is labeled OUTPUT and shows the computed parameter (please, refer to the label on the side of the enclosure).

Note: If the computed parameter is dew point, negative values are automatically converted to frost point (above ice).

The bottom display is labeled INPUT and shows one of the input parameters: temperature, relative humidity or pressure. Three LED's located below the display show which input parameter is being displayed (T, RH, P).

Upon power up, the default input parameter is temperature. The INPUT display is user selectable. To select the parameter being displayed, open the cover of the HC321A and press on the red button located inside of the cover.

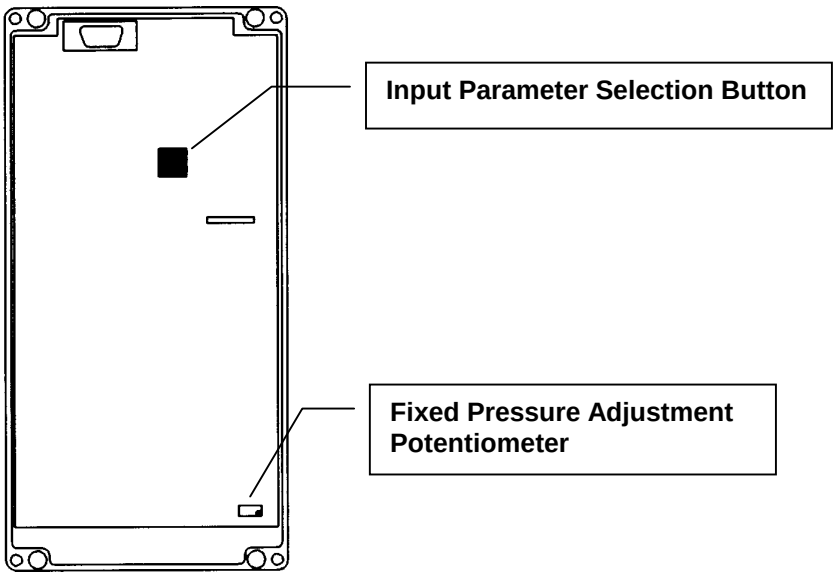

4.2 Fixed Pressure Adjustment (Standard HC321A)

The effect of pressure on dew point is automatically taken into account through the measurement of relative humidity. Therefore, no barometric pressure input is required.

Unlike dew point, the following computed parameters require barometric pressure as an input:

- Humidity Ratio (g/kg or gr/lb)
- Wet Bulb Temperature (°C or °F)
- Enthalpy (kJ/kg or BTU/lb)

The standard version of the HC321A used a fixed value of pressure. This value can be adjusted by the user to match the conditions of the application (for example: average barometric pressure at the local altitude).

To adjust the value of the fixed pressure, open the HC321A cover. Press on the input parameter selection button to display the current value of the fixed pressure on the INPUT (bottom) display. Pressure is displayed in the engineering unit that was set at the factory (see label on the side of the enclosure). The pressure value can be adjusted with the potentiometer shown on the previous drawing.

Note: the pressure adjustment potentiometer is not installed on models that have the optional terminal block to accept the signal from an external pressure transmitter.

4.3 Output Signals

The output signals (computed parameter and one input parameter) are factory set and are not user adjustable. Consult the label on the side of the enclosure for the specifications of these outputs.

The output signals are not affected by the selections made on the display. For example, if one of the outputs was set to be the dry bulb temperature, changing the INPUT (bottom) display from temperature to relative humidity has no effect on the output.

5. MAINTENANCE

5.1 Cleaning or Replacing the Dust Filter:

The dust filter should be cleaned from time to time, depending on the conditions of measurement. Cleaning should be done without removing the filter from the probe. Gently wipe the filter with a solution of water and mild detergent. If this does not remove most of the stains, the filter should be replaced. To do this, unscrew the filter from the probe.

Before installing a new dust filter, check the alignment of both sensors with the probe. The wires that connect the sensors to the probe are very thin and bend easily. If this happens, correct the alignment by holding the sensor very gently with a pair of small flat nosed pliers.

2. Periodic Calibration Check:

When the probe is operated within the limits specified in chapter 2, long term stability of the humidity sensor is typically better than 1 %RH per year. For maximum accuracy, calibration of the unit may be verified every 6 to 12 months.

Applications where the probe is exposed to significant pollution may require more frequent verifications. The calibration procedure is described in detail in this manual.

Both the Pt 100 RTD temperature sensor and associated electronics are very stable and should not require any calibration after the initial factory adjustment.

6. CALIBRATION

Calibration of the HC321A can be done either on site (one-point calibration) or in a metrology laboratory (standard calibration). The decision to use one procedure or the other depends on the conditions of the application.

- Any adjustment of temperature (dry bulb temperature) should be done prior to any adjustment of relative humidity or of the computed parameter.
- Adjustments made to the computed parameter are automatically reflected in the relative humidity signal and vice versa.
- It is indifferent to adjust either the display or the output signals of the HC321A. Both are tied internally and should always be in agreement. If the display and output signals do not agree, the unit should be returned to the factory.

When dew point is the computed parameter, the dew point readings should be calibrated directly against a dew point reference. The exception is a calibration at high humidity: calibrating the relative humidity display or output results in better accuracy. For other types of computed parameter, calibrate the relative humidity display or output against a relative humidity reference.

Note: when dew point is the computed parameter, the HC321A automatically converts negative values to a frost point (the reference is the steam tables above ice).

6.1 Calibration Basics

a) Temperature Calibration

The stability of the Pt100 RTD sensor used to measure temperature is such that temperature calibration in the field is seldom required.

In order to use a reference thermometer to correctly evaluate the accuracy of the temperature measurements provided by the HC321A probe, you should meet the following requirements:

• Both the probe and the reference thermometer should be ventilated with the same stream of air. Any dust filter used to protect the sensors should be removed from the probe. If the probe has a slotted cap, this should be left on the probe.

• Air velocity should be within the limits of 200 to 500 feet/minute (1 to 2.5 meters/second). Any comparison between two instruments at velocities under 200 feet/minute may not be valid. Air velocity above 500 feet/minute may damage the unprotected humidity sensor.

• The temperature of the air stream should be constant or at least it should not change at a rate that is less than 10 times the shortest time constant of either the probe or reference thermometer.

If you cannot meet the above requirements, you cannot correctly check the accuracy of temperature measurements and should not attempt to calibrate the temperature signal.

b) Direct Dew Point Calibration

When dew point is the computed parameter, the dew point readings provided by the HC321A should be directly calibrated against a traceable instrument that provides a dew point read out. At values below 10°C DP (measured at normal room temperature), using the relative humidity readings to indirectly calibrate dew point is usually not accurate enough. The exception is a calibration at a high humidity value: at dew points that are only a few degrees below dry bulb temperature, calibration of the relative humidity reading is generally more accurate than a direct dew point calibration.

The requirements for a direct dew point calibration are essentially the same as the requirements already mentioned for a temperature calibration.

c) Relative Humidity Calibration

When the HC321A provides a computed output other than dew point, the only possibility is to calibrate the relative humidity readings of the HC321A. The reference can be a traceable relative humidity instrument or a physical standard such as an aqueous salt solution.

When using a relative humidity instrument as a reference, you should meet the requirements already mentioned for a temperature calibration.

The ER15 calibration device permits using a salt solution as relative humidity reference. This device is a small airtight container that slips over the probe of the HC321A and seals around the humidity sensor.

RIC humidity standards permit calibration by non-skilled personnel. These standards are available in boxes of 5 glass ampoules of the same value, which can be stored indefinitely. Standards in the range of 5 to 95 %RH are non-saturated aqueous salt solutions that are precisely titrated at our factory for the right concentration.
The 0 %RH humidity standard is made of small granules of a highly porous ceramic that have been dried at a high temperature. A Material Safety Data Sheet is available for each standard. Since humidity standards other than the 0 %RH standard are a salt solution, parts which have come in contact with the liquid should be cleaned after each use.

During a direct calibration of the relative humidity signal, **temperature stability at the probe is the single most important requirement**. The standard humidity calibration procedure should be performed at room temperature (20 to 30°C). Temperature should be stable to ±0.25°C or better during the period of time required for each calibration point (see note below). Do not calibrate close to an air vent or a heater, in direct exposure to sun rays, etc.

Note: If calibrating with a calibration device and a reference solution (direct calibration of the %RH signal), temperature stability may be improved by placing the tip of the probe and calibration device inside of a box filled with sand.

6.2 Calibration Potentiometers

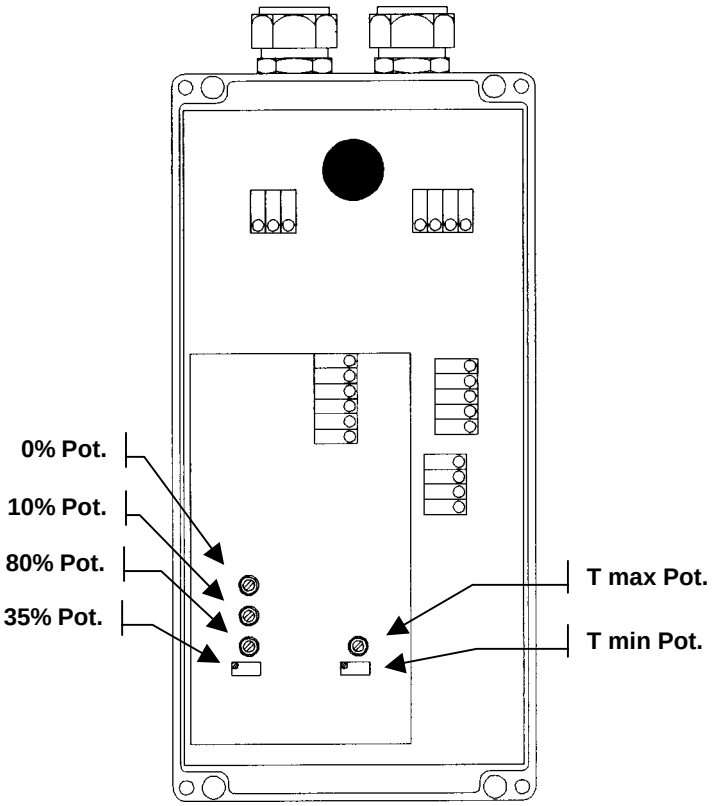

6.3 One-Point Calibration

Many applications in the area of process control, clean rooms, HVAC, etc. have humidity and temperature conditions that are maintained within narrow limits. For such applications, using a one-point calibration is both appropriate and economical.

The method of calibration consists in measuring “on site” the prevalent conditions with a traceable, reference instrument. The display of the HC321A is adjusted to match the display of the reference instrument.

The following ROTRONIC products may be used to provide the reference: PA1 indicating probe (%RH and temperature) or AM3 indicator with HP101A-KH probe (dew point, %RH and temperature). See also paragraph 3.3.

To be valid, a one-point calibration should meet the following requirements:

- The humidity and temperature conditions during calibration should be reasonably stable. Over a period of 15 min., temperature should not vary by more than 1°F (0.5°C).

- The probe of both instruments should be ventilated or placed in the same stream of moving air. Air velocity must be at least 200 ft/min (1m/s).

Usually, it is temperature equilibrium that takes the longest time. Depending on the initial conditions, equilibration can take from a few minutes to as long as 15..20 minutes. If the initial temperature difference between the two probes is more than a few degrees, be sure to wait at least 15 min. before calibrating.

The calibration sequence is as follows:

- Select temperature on the INPUT (bottom) display. If necessary, adjust the **T min** potentiometer so that the display agrees with the reference instrument.
- With the 35% potentiometer, adjust the humidity display using either dew point (if applicable) shown on the OUTPUT display or relative humidity shown on the INPUT display (you may first have to change the display selection). Adjusting one of the displays automatically results in a corresponding change in the other.

6.4 Standard Calibration (metrology laboratory)

Standard calibration of the HC321A consists in a 2-point calibration of temperature and a 4-point calibration of humidity.

Calibration should be done exactly in the sequence indicated in this manual. Because of the high stability of the Pt100 RTD sensor, temperature calibration is optional. However, if temperature calibration becomes necessary, it must be done prior to humidity calibration and must always be followed by a humidity calibration.

A) Temperature Calibration (optional)

The procedure to be followed depends on the calibration equipment that is available.

a) Variable Temperature Ventilated Tunnel with a span of 0°C to 50°C:

- Select temperature on the bottom display (INPUT).
- Position the T max potentiometer in the middle of its span.
- Set the air temperature to 0°C and adjust the display with the T min potentiometer. If you cannot go as low as 0°C, you will have to repeat the entire procedure a few times.
- Set the air temperature to 40 to 50°C and adjust the display with the T max potentiometer.

b) Room Temperature Ventilated Tunnel

Remove the Pt100 RTD from the probe and replace it by a decade box that simulates the resistance of the RTD at different temperatures. Adjust the electronic circuit as follows:

- Select temperature on the bottom display (INPUT).
- Position the T max potentiometer in the middle of its span.
- Set the decade box to simulate 0 °C.
- Adjust the display with the T min potentiometer.

- Set the decade box to simulate a temperature of either 50 or 100°C.
- Adjust the display with the T max potentiometer.
- Put the Pt100 RTD back on the probe and check the display at room temperature. If necessary, adjust the display with the T min potentiometer.

After calibrating temperature you should always calibrate humidity since the humidity output is affected by the temperature output.

B) Dew Point Calibration (if applicable)

NOTE: Dew point calibration requires the use of a humidity generator to expose the probe of the HC321A to the full range of humidity conditions.

The first calibration adjustment should be at a value close to 10°C DP (measured at normal room temperature).

- Set the humidity generator to a dew point of about 10°C.
- On the HC321A, set the 80% potentiometer in mid position.
- Allow for equilibration of both the HC321A probe and reference dew point indicator.
- At equilibrium (stable readings), adjust the HC321A display with the 35% potentiometer.

Use a dew point corresponding to about 80%RH as the second calibration value.

- Set the humidity generator to the dew point.
- Allow for equilibration of both the HC321A probe and reference dew point indicator.
- At equilibrium, adjust the HC321A display with the 80% potentiometer

Note: doing the high humidity calibration against a relative humidity reference at 80%RH (as opposed to using a dew point reference) will result in a better dew point accuracy at values close to dry bulb temperature.

The low humidity calibrations are the last step of the calibration sequence.

- Set the humidity generator to a <u>frost</u> point of about -12°C.
- At equilibrium, adjust the display with the 10 % potentiometer
- Set the humidity generator to a <u>frost</u> point of about -30°C.
- At equilibrium, adjust the display with the 0 % potentiometer

C) Relative Humidity Calibration

This procedure is used when the HC321A provides a computed parameter other than dew point or when no humidity generator is available.

The first calibration adjustment should be at a value close to 35 %RH.

- Slip the ER15 calibration device on the probe and make sure it seals tightly on the probe. The receptacle of the calibration device (or solution holder) should be under the sensors. Remove the receptacle from the calibration device.
- Set the 80% potentiometer in mid position.
- Place one fiber disc (each box of RIC humidity standards includes 5 discs) in the receptacle of the calibration device. The purpose of this disc is to prevent accidental spilling of the solution inside the calibration device or on the humidity sensor.
- Tap the top of one ampoule of 35 %RH solution so that all liquid drops to the bottom of the ampoule. Snap off top and empty contents on fiber disc. **Since the ampoule is made of glass, exercise proper caution (gloves, safety glasses) when snapping off the top.**
- Put the receptacle back on the calibration device and make sure that the solution does not come in contact with the sensor: **The solution inside the calibration device should never be on top of the sensors.**
- Allow at least 60 minutes to insure that the calibration device, the solution and the sensor are in a state of equilibrium. This is verified by monitoring the display.
- At equilibrium (stable readings), adjust the display with the 35% potentiometer.
- Remove the receptacle from the calibration device. Throw away the wet disc (non reusable). **Thoroughly wash and dry the receptacle, removing all traces of the humidity standard.**

Use 80 %RH as the second calibration value as this provides the best overall accuracy over the full range of measurement.

- Repeat the procedure used for the 35 %RH adjustment with an 80 %RH standard. Allow at least 60 minutes for equilibrium.
- At equilibrium, adjust the display with the 80% potentiometer
- Remove the receptacle from the calibration device and clean thoroughly.

The low humidity calibration is the last step of the calibration sequence.

- Repeat the procedure used before first with a 10%RH and after this with a 0 %RH standard. Allow each time at least 90 minutes for equilibrium.
- At equilibrium, adjust the display with the 10 % potentiometer (10 % standard) or with the 0 % potentiometer (0 % standard).
- Carefully remove the calibration device from the probe (pay attention not to catch the unprotected sensors). Put the dust filter back on the probe. Thoroughly clean the receptacle.

7. GENERAL DESCRIPTION

7.1 Power Supply

The HC321A is available for operation with one of the following types of voltage supply: 24 VDC, 24 VAC, 115VAC or 220VAC. With 24 VDC, the current draw is 180 mA. When operating with a DC supply voltage, the HC321A can be grounded at the (-) power terminal. When operating with an AC supply voltage, the third wire should be attached to the appropriate terminal (see Installation).

7.2 Humidity and Temperature Measuring Circuits

The analog circuits used to process the signals provided by the humidity and temperature sensors are located on one board. These circuits provide two analog voltage signals within the following ranges:

0..5VDC = 0..100%RH
0..5VDC = -50..150°C (-58..302°F)

These ranges define the limits for the output signals provided by the HC321A.

7.3 Analog to Digital Conversions

The analog voltage signals corresponding to the input variables (temperature, relative humidity and fixed pressure) are fed to a floating differential amplifier with an input resistance greater than 1 Mohm.
Note: When the optional pressure transmitter input is being used and is configured for a 4-20 mA signal, the floating differential amplifier has an input resistance of 10Ω. When the pressure signal is 4-20 mA, the HC321A must be the last device in the pressure current loop.

A 12-bit A/D converter is used to read the analog signal from the differential amplifiers. In order to provide the best possible resolution during the analog to digital signal conversion, the input signals are made to correspond to as much as possible of the 2.5 VDC span of the 12-bit A/D converter:

4-20 mA corresponds to 0.5-2.5 VDC.
0-20 mA, 0-10 V, 0-5 V or 0-1 V correspond to 0-2.5 VDC.

The optional pressure input is factory set to the type of signal (current or voltage), range and engineering units specified when ordering.

Pressure Input Range Limits (1): 0..9999 kPa / kp/cm2 / PSIA / In Hg

(1) Any partial range can be programmed between these limits. We recommend limiting the span of the signal to a maximum of 400 engineering units so as to maintain resolution of the A/D conversion within 0.1 engineering units.

7.4 Microprocessor

The digital signals provided by the A/D input converter are fed by means of an 8-bit data bus to an 8031 microprocessor. Factory settings such as the input and output ranges and engineering units are stored in an EEPROM. A watchdog circuit ensures that computations restart automatically in the event of a power failure.

7.5 Output Circuits

The HC321A has two analog outputs: one output corresponds to the computed parameter (dew point or other), the other output repeats one of the input parameters (temperature, relative humidity or pressure) as specified when ordering.

Data from the microprocessor is converted by means of two 12-bit D/A converters. This provides a high resolution with 4096 steps on each output signal. For example, if the span of the dew point output is 150°C, output resolution is better than 0.04°C.

The HC321A is available with the following types of linear DC current or voltage output signals:

4-20 mA or 0-20 mA
0-10 VDC or 0-5 VDC or 0-1 VDC

The current output signals can be read with any current sensing device having a maximum impedance of 500 ohms. When several devices are connected in series with the HC321A, the resulting impedance should not exceed 500 ohms, wiring included. In the case of a voltage output, the minimum load on the HC321A should not be less than 10 kohm.

Each output signal is factory set to both the range and engineering units that were specified when ordering. Outputs can be specified within the following limits:

a) Output 1 (computed parameter)

Dew Point Range Limits (1)	:-99.9..+999.9°C or °F
Wet Bulb Range Limits (1)	:-99.9..+999.9°C or °F
Humidity Ratio Range Limits (1)	: 0..9999 g/kg or Gr/Lb
Enthalpy Range Limits (1)	: -999..9999 kJ/kg or BTU/Lb

b) Output 2 (temperature, relative humidity or pressure)

Temperature Range Limits (1)	: -50..150°C (-58..302°F)
%RH Range Limits (1)	: 0..100 %RH
Pressure Range Limits (1)	: 0..9999 kPa / kp/cm2 / PSIA / In Hg

(1) Any partial range can be programmed between these limits. Since resolution depends on the span of the output signal, we recommend limiting the span of the temperature

outputs to a maximum of 400°F or 400°C so as to as to maintain resolution within 0.1°F or 0.1°C.

7.6 Front Panel Display and Indicators

The front panel of the HC321A has two 4-digit LED displays and three LED indicators.

The top LED display (OUTPUT) shows the computed parameter. Depending on factory settings, this can be dew point, wet bulb temperature, humidity ratio or enthalpy.

The bottom display (INPUT) shows one of the input parameters: temperature, relative humidity or pressure. One of the three LED indicators is lit to show which parameter is being displayed. The displayed parameter can be selected by pressing on the switch located inside of the HC321A cover. The output signals are not affected by the display selection.

8. THEORY OF OPERATION

8.1 Computation Method

The HC321A measures relative humidity with a HYGROMER™ C80 capacitive sensor and temperature with a Pt100 RTD.

Using temperature, the HC321A computes the corresponding value of the saturation water vapor pressure with a polynomial equation. The partial pressure of water vapor is then computed from the value of relative humidity. An iteration is used next to compute dew point temperature. The computations automatically provide a frost point for negative values, This removes the uncertainty typical of chilled mirror hygrometers.

In the temperature range of -50 to 200°C, the difference between the polynomial equation and the steam tables published by the American Institute of Physics (1972 Handbook) is less than 50 ppm (0.005%). In the range of 0 to 100°C, the equation agrees within 20 ppm with the values of Table X2.1 of ASTM standard E 337.

When the computed parameter is the humidity ratio, wet bulb temperature or enthalpy, barometric pressure is required as an input. The standard version of the HC321A uses a fixed pressure value. This value can be adjusted with a potentiometer to match local pressure. As an option, the HC321A is available with an input circuit to read the signal from a pressure transmitter.

For the computation of enthalpy, the HC321A follows the common practice of providing a relative value instead of an absolute value. In the metric system (kJ/kg), 0°C is used as the reference temperature and the enthalpy of dry air at 0°C is set to be equal to zero. A negative value of enthalpy is possible and this indicates an energy level that is less than that of dry air at 0°C. When the enthalpy output is set to the English system (BTU/Lb), the HC321A uses 0°F as the reference temperature.

8 2 Accuracy and Repeatability

The HC321A measures temperature with an accuracy of ±0.3°C (±0.5°F) and humidity with an accuracy of ±1.5%RH or better at 20..30°C (68..86°F). Humidity accuracy is better than ±3.0%RH within the temperature range of -20..120°C (-5..248°F).

The internal computations of the HC321A are very accurate. Assuming no error on the input signals, the computation error would be less than 0.1% of the computed value.

Accuracy of the computed parameter depends on the humidity and temperature conditions (see diagrams). For example, at room temperature, the HC321A measures dew point down to -40°C (-40°F) with an accuracy better than ±1°C (±1.8°F).

Over the range of operating conditions, the typical repeatability is ±0.4°C DP (±0.7°F DP) or better. With an humidity ratio output (g/kg or gr/lb), repeatability is ±0.03 g/kg to ±10 g/kg (±0.2 gr/lb to ±70 gr/lb).

DEW POINT ACCURACY

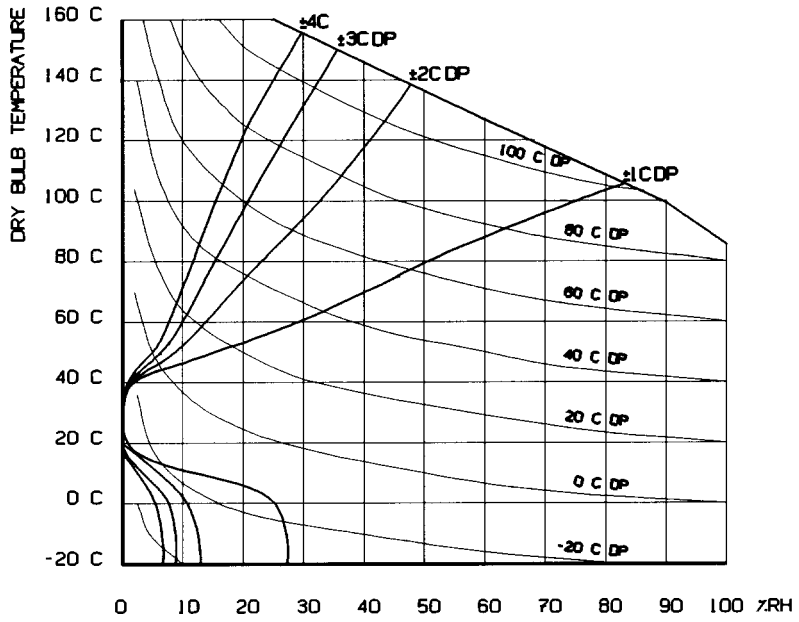

HUMIDITY RATIO ACCURACY

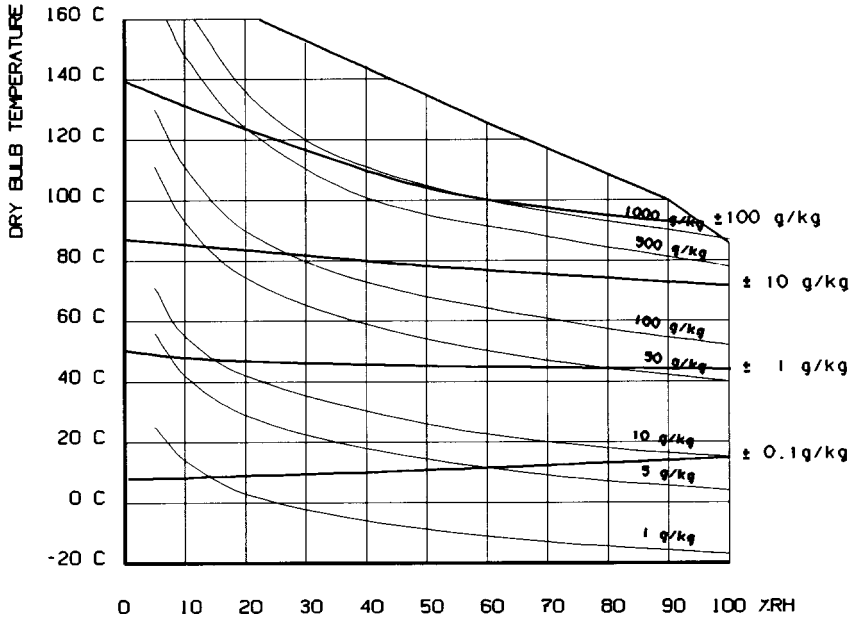

9. SPECIFICATIONS

Configurations	HC321A-W: Wall Mount HC321A-R : Remote Pbe
Humidity Sensor	ROTRONIC HYGROMER™ C80
Temperature Sensor	Pt100 RTD
Standard Measuring Ranges HC321A-W	0..100 %RH 0..100°F Dry Bulb (Output1) -50..100°F Dew Point (Output 2) other outputs/ranges: see below.
Standard Measuring Ranges HC321A-R	0..100 %RH 0..300°F Dry Bulb (Output1) -50..250°F Dew Point (Output 2) other outputs/ranges: see below.
Output Signals (linear)	4-20 mA or 0-20 mA, max. 500 Ω 0-10VDC or 0-5VDC or 0-1VDC, min. 10 kΩ
Optional Range Limits (1)	Dry Bulb: -99.9..+999.9°C or °F Dew Point: -99.9..+999.9°C or °F Wet Bulb: -99.9..+999.9°C or °F Humidity Ratio: 0..9999 g/kg or Gr/Lb Enthalpy: -999..9999 kJ/kg or BTU/Lb
Temperature Limits at Electronics	-20..131°F (-29..55°C)
Normal Operating Temp. At Electronics	-5..122°F (-20..50°C)
Temperature Limits at Sensors	HC321A-W: -20..131°F (-29..55°C) HC321A-R : -100..320°F (-75..160°C)
Normal Operating Temp. at Sensors	HC321A-W: -5..122°F (-20..50°C) HC321A-R : -5..248°F (-20..120°C)
Humidity Limits at Sensors	100%RH up to 185°F (85°C) 90%RH at 212°F (100°C) 60%RH at 260°F (125°C) 25%RH at 320°F (160°C)
Optional Pressure Input (linear)	4-20 mA or 0-20 mA 0-10VDC or 0-5VDC or 0-1VDC
Pressure Input Impedance	Current: 10 ohm, Voltage > 1 Mohm
Pressure Range Limits (1)	0..9999 kPa or kp/cm2 or PSI or In Hg
Accuracy at 68..86°F (20..30°C)	± 1%RH from 0 to 100%RH ±1.8°F (±1.0°C) DP or better ± 0.5°F (±0.3°C)
Repeatability	±0.3%RH / ±0.7°F DP (±0.4°C) ±0.2°F Dry Bulb (±0.1°C)
Humidity Sensor Stability	better than 1%RH over a year
Response Time (without filter)	10 seconds (%RH and temperature)
Calibration Potentiometers	35, 80, 10 and 0%RH / Tmin and Tmax
Supply Voltage	115 VAC or 220 VAC or 24 VDC/VAC

	180 mA at 24 VDC
Wiring Type	Terminals 18 AWG Max. 1/2" Conduit Adapters (x2)
Electrical Connections	Press. Input : 2 Wires (optional) Outputs (2) : 2 Wires per Signal D/C Power : 2 Wires A/C Power : 2 Wires + Ground
Probe Cable Length (HC321A-R)	6 feet (2 m)
Sensor Protection	Dust Filter (standard)/ Slotted Cap (Optional)
Probe Dimension/Material	HC321A-W: 100 x 15mm (PPS) HC321A-R : 250 x 15 mm (PPS)
Case Dimensions	240 (H) x 120 (W) x 100 (D) mm (9.45 x 4.72 x 3.94")
Weight	3.2 lbs (1450g)
Case Material	Polycarbonate
Case Protection	NEMA 4 / DIN IP 65
Remote Probe Holder	QMA15 (Order Separately)

(1) Any partial range can be factory set. To maximize resolution, we recommend limiting both the temperature and dew point ranges to a maximum span of 400°F or 400°C.

OUTLINE DRAWING

HC321A-R

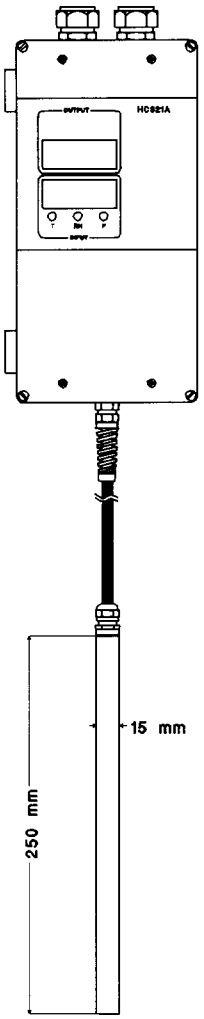

HC321A-W