HygroFlex

Humidity Temperature Transmitter

Instruction Manual

v3

Contents

About the version number: this manual is valid for all instruments that display version number 3.x, where 3.x can be 3.0, 3.1, etc. (see Function Menu, SYS STATUS).Changes in the last digit of the version number reflect minor changes in the internal software of the instrument that do not affect the manner in which the instrument should be operated.

Note: functions such as instrument configuration with a PC as well as the calibration of HygroClip probes with a PC require the optional HW3 software. Instructions for using the HW3 software are not included in this manual. These instructions are shipped separately on the same CD ROM as the HW3 software.

Overview

The HygroFlex is a series of 3-wire humidity temperature transmitters that is available with a wide variety of probes for use in many different industrial and scientific applications. The HygroFlex series uses a micro-processor based design to achieve unparalleled accuracy, reliability and versatility. The HygroFlex is available in 3 different models:

HygroFlex 1: basic industrial transmitter with analog outputs relative humidity and temperature

- compatible with any ROTRONIC HygroClip digital probe [1)]
- relative humidity and temperature analog outputs
- test connector for communication with the HygroPalm indicator [2)]
- software-based probe calibration (HygroClip probes only)
- internal service connector (RS232) for configuration with PC (units, ranges)
- two linear analog outputs, signal type (mA, V) configurable by means of jumpers [3)]
- optional LC display and keypad [4)]

1) ROTRONIC analog probes are also accepted with some restrictions
2) allows the HygroPalm to read the transmitter or to calibrate a digital probe
3) 0..1V, 0..5V, 0..10V, 0..20 mA, 4..20 mA
4) allows direct calibration of digital probes by the transmitter and direct access to other functions

HygroFlex 2: fully digital, networkable industrial transmitter relative humidity, dew point (or other) and temperature

- compatible with any ROTRONIC HygroClip digital probe [1)]
- optional analog input for second probe [2)]
- relative humidity, temperature, dew point, wet bulb, mixing ratio, enthalpy, etc. or user defined calculation such as the difference between temperature and dew point [3)]
- test connector for communication with the HygroPalm indicator [4)]
- software-based probe calibration (HygroClip probes only)
- RS232 and RS485 digital ports [5)]
- optional LC display and keypad [6)]

1) ROTRONIC analog probes are also accepted with some restrictions
2) pressure probe or ROTRONIC HygroClip digital probe – some restrictions apply
3) uses either a fixed barometric pressure value or the measurements from an analog pressure probe for those parameters that require pressure as a computational input. The fixed pressure value can be changed with the optional HW3 software.
4) allows the HygroPalm to read the transmitter or to calibrate a digital probe
5) The computed parameter (dew point or other) is not sent to these ports. Use of the HW3 software on a PC allows real time computation of the dew point (or other) and facilitates both networking and instrument configuration
6) allows direct calibration of digital probes by the transmitter and direct access to other functions

HygroFlex 3: ***analog / digital, networkable industrial transmitter relative humidity, dew point (or other) and temperature***

- compatible with any ROTRONIC HygroClip digital probe [1)]
- optional input for second probe [2)]
- relative humidity, temperature, dew point, wet bulb, mixing ratio, enthalpy, etc. or user defined calculation such as the difference between temperature and dew point [3)]
- test connector for communication with the HygroPalm indicator [4)]
- software-based probe calibration (HygroClip probes only)
- RS232 and RS485 digital ports [5)]
- three linear analog outputs, signal type (mA, V) configurable by means of jumpers [6)]
- optional LC display and keypad [7)]

1) ROTRONIC analog probes are also accepted with some restrictions
2) pressure probe or ROTRONIC HygroClip digital probe – some restrictions apply
3) Uses either a fixed barometric pressure value or the measurements from an analog pressure probe for those parameters that require pressure as a computational input. The fixed pressure value can be changed with the optional HW3 software.
4) allows the HygroPalm to read the transmitter or to calibrate a digital probe
5) The computed parameter (dew point or other) is not sent to these ports. Use of the HW3 software on a PC allows real time computation of the dew point (or other) and facilitates both networking and instrument configuration
6) 0..1V, 0..5V, 0..10V, 0..20 mA, 4..20 mA - corresponding to relative humidity, temperature and computed parameter of probe 1 (or replace any of these parameters with relative humidity of probe 2)
7) allows direct calibration of digital probes by the transmitter and direct access to other functions

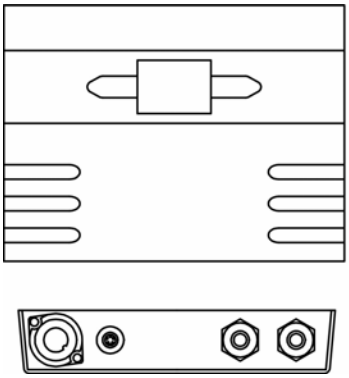

HygroFlex 1

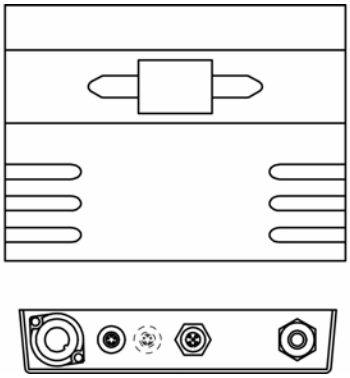

HygroFlex 2

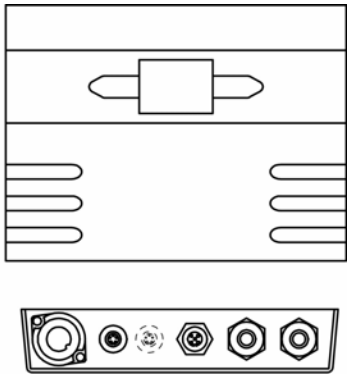

HygroFlex 3

General Description

Power Requirements

The HygroFlex is available with a choice of two basic internal power modules:

- standard power module for operation with 12 to 35 VDC (maximum 300 mA) or with 12 to 24 VAC.
- optional power module for operation with voltages within the range of 90 to 264 VAC (50/60 Hz).

Probes and Probe Inputs

Model	HygroFlex 1	HygroFlex 2	HygroFlex 3
number of probe inputs	1	1 (standard) or 2 (optional)	
probe types (see below)	ROTRONIC Digital ROTRONIC Analog	ROTRONIC Digital ROTRONIC Analog Third-Party Analog	
number of digital input channels	1	1 (input 1) + 1 (input 2 - optional)	
number of analog input channels	2	2 (input 1) + 1 (input 2 - optional)	
analog input A/D resolution	10-bit	10-bit	

Unless otherwise specified when ordering, all probe inputs are factory programmed to accept a HygroClip digital probe. Prior to using any analog probe, the corresponding input should be re-programmed. This can be done with the HW3 software after connecting the RS232 port to a PC (see separate HW3 manual). A matching adapter cable is required to connect analog probes.

HygroClip Digital Probes

The HygroFlex is primarily designed for use with the ROTRONIC HygroClip digital humidity temperature probes. These probes permit to take full advantage of all the features and functions of the HygroFlex such as the software based calibration.

The ROTRONIC HygroClip digital probes are highly accurate and are calibrated entirely by means of software (no adjustment potentiometers). Because calibration and other data are stored in the probe non-volatile memory, the probes are fully interchangeable. When a probe requires calibration or has to be repaired, it can be replaced with another probe in a few seconds. The ROTRONIC HygroClip digital probes are available in different configurations so as to meet the requirements of each application:

L. 145mm (5.7")
Dia. 15mm (0.6")

HygroClip IW
for surface mount (area monitoring)
max. 85°C (185°F) – wire mesh filter
observe temperature limits of transmitter electronics

Tube L. 100/250mm (3.9/9.8")
Dia. 15mm (0.6")
Cable: 2m (6.5ft)

HygroClip IC-1 (100mm) / IC-3 (250mm)
for through-wall installation
max. 200°C (392°F) - wire mesh filter

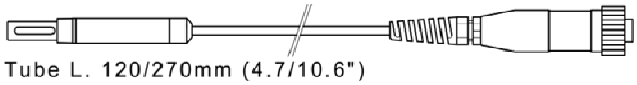

Tube L. 120/270mm (4.7/10.6")
Dia. 15mm (0.6")
Cable: 2m (6.5ft)

HygroClip IM-1 (120mm) / IM-3 (270mm)
for through-wall installation in high humidity applications
max. 200°C (392°F) - wire mesh filter

Cable: 2m (6.5ft)

HygroClip IE-1 (G ½") / IE-2 (NPT ½")
for compressed air (max. 50 bar / 725 PSI)
max. 85°C (185°F) – sintered steel filter
to avoid errors, temperature should be the same on both sides of the mounting wall

Dia. 5mm (0.2")
Cable: 2m (6.5ft)

HygroClip IC-05
for measurement in tight spaces
max. 100°C (212°F)

Probe Extension Cable AC1616/xxx
with built-in signal booster
xxx = 002 to 200
from 2 to 200 m (about 6.5ft to 656ft)
max. temperature 85°C (185°F)

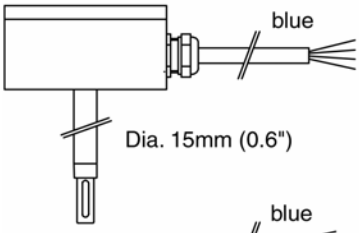

HygroClip ID-EX-xxx (intrinsically safe)
for through-wall installation
xxx = 002 to 100
from 2 to 100 m cable length (about 6.5ft to 328ft)
max. temperature at sensors: 200°C (392°F)
probe length 250 mm - sintered steel filter

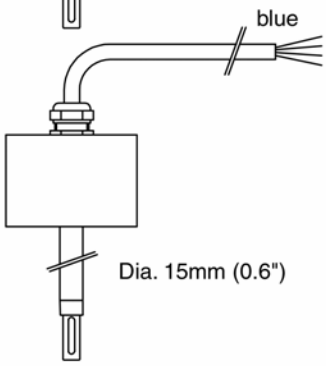

HygroClip IW-EX-xxx (intrinsically safe)
for surface mount (area monitoring)
xxx = 002 to 100
from 2 to 100 m cable length (about 6.5ft to 328ft)
max. temperature 40°C (104°F)
probe length 150mm
sintered steel filter

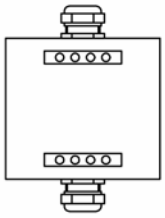

ZB1 Zenner Barrier for ID-EX and IW-EX

AC1617xxx Connecting Cable for ZB1
with built-in signal booster
xxx = 002 to 100
2 to 100m (about 6.5ft to 328ft)

Analog Probes (HygroFlex 2 and HygroFlex 3)

Depending on the model and options, the HygroFlex transmitter can be used with one or two analog probes. Both the scale and unit of the analog input signals can be defined with the HW3 software. For example, an analog pressure probe may used to provide the local value of barometric pressure for the computation of parameters such as the wet bulb temperature, mixing ratio or enthalpy.

Use of analog probes is subject to the following restrictions and limitations:

a) ROTRONIC analog humidity-temperature probes with the standard temperature output signal of – 0.5…2.0 V = -50…200°C: because the HygroFlex cannot read a negative voltage signal, temperature measurement is generally limited to values above freezing.

b) Third-party analog probes: single channel probes (one signal), output signal within the range of 0 to 2.5 VDC, supply voltage: 15 VDC or less, maximum current consumption: 10 mA.

c) Resolution is limited by the 10-bit A/D converter used for the analog inputs. This converter provides a theoretical maximum of 1024 counts for an input voltage span of 2.5 VDC. In theory, this gives a resolution of 2.5 / 1024 = 0.00244 V. In practice, it is not possible to get 100% of the counts from an A/D converter and the actual resolution should be about 0.0027 V (typical). For example, if a probe with a temperature signal of 0..1 V = 0…100°C is being used, the signal resolution will be about 100 x 1 x 0.0027 = 0.27°C

Analog Outputs (HygroFlex 1 and HygroFlex 3)

Model	**HygroFlex 1**	**HygroFlex 2**	**HygroFlex 3**
analog outputs	- relative humidity - temperature	N/A (digital output only)	Any three of: - relative humidity - temperature - computed parameter - user defined calculation *see note 1) below*
output signals [2)] configurable with jumpers	0…1 V 0…5 V 0…10 V 0…20 mA 4…20 mA	N/A	0…1 V 0…5 V 0…10 V 0…20 mA 4…20 mA
D/A output resolution	Out 1: 12-bit Out 2: 16-bit	N/A	Out 1: 12-bit Out 2: 16-bit Out 3: 12-bit
options	floating analog current outputs	N/A	floating analog current outputs 16-bit D/A resolution for Out 1, allows 0.1 resolution with a span of more than 200 units.

1) Any of the 3 analog outputs of the HygroFlex 3 can be set to correspond to humidity [probe 1 or 2] or temperature [probe 1 or 2] or calculated parameter [probe 1 or 2] or user defined calculation or optional analog probe signal (such as pressure). The HygroFlex is set at the factory as specified when ordering. These settings can be changed at any time with the optional HW3 software.

2) The output signals are set at the factory according to the type and range specified when ordering. A label located on the transmitter housing shows the type of output signal for each unit.

The analog output signals are linear and are consistent with the requirements of most data/signal processing instrumentation (panel meter, controller, computer card, etc.).

Connection to a PC - RS232 Digital Port

The HygroFlex 1 has an internal RS232 service connector. In addition to this service connector, both the HygroFlex 2 and 3 have an external RS232 connector (located on the connector plate). In principle, any communication software can be used to interrogate and read the HygroFlex with the commands described in appendix 7 (RS232 communication protocol). Use of the optional HW3 software simplifies this task. It is important to note the following:

HygroFlex 1: use of the RS232 port (internal service connector) is limited to configuring the instrument (units, range, etc.). Measurement data and calibration functions are not available on this port.
HygroFlex 2 and 3: use either the internal RS232 service connector or the external RS232 port to configure the transmitter or calibrate the probe. Use the external RS232 port to connect the transmitter to a network. The computed parameter (dew point or other) is not part of the digital communication (limited to %RH and temperature – in the unit selected for the transmitter).

HW3 Software

The HW3 software (optional) allows real time computation of the dew point (or other) by the PC while providing additional functionality such as:

- RS485 networking (up to 32 units)
- full access to instrument configuration (unit system, etc.)
- calibration of the ROTRONIC HygroClip digital probes with or without HygroFlex
- data logging to a PC disk file
- graphic functions (both on and off-line)

HW3 runs on any PC with Windows 98 or NT. For more details see separate instruction manual provided with the HW3 software.

RS485 Networking (HygroFlex 2 and HygroFlex 3)

With the optional HW3 software up to 32 HygroFlex 2 or 3 transmitters can be connected together on a network. Any transmitter can be used either as a slave or a master, without special configuration. Each unit must be given a unique network address with the HW3 software (0 to 31). The master is automatically the unit that is connected to the COM port of the PC by means of the RS232 port. See Electrical Installation for details.

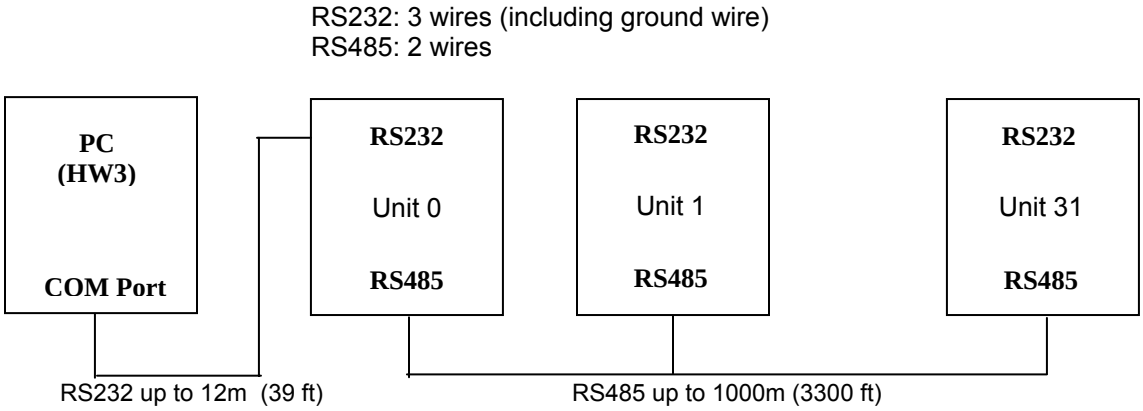

Unit System

The unit system of the HygroFlex (Metric or English) is factory programmed as specified when the instrument was ordered. The unit system can be changed by the user with the optional HW3 software.

Optional Display and Keypad

The LC display shows which probe input is being displayed (small indicator on top of the display) and up to 2 parameters measured by the probe, with the associated engineering unit. When relevant, the message line provides additional information.

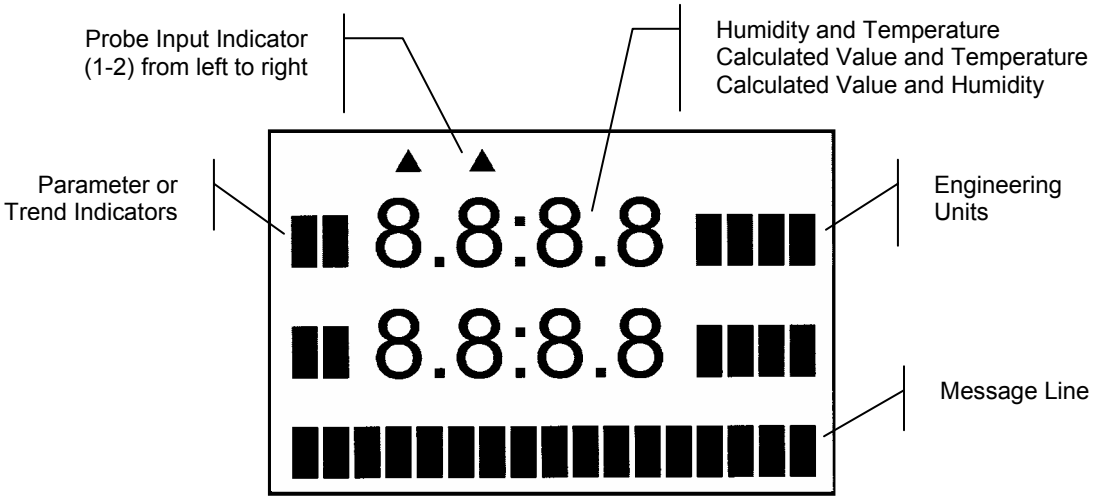

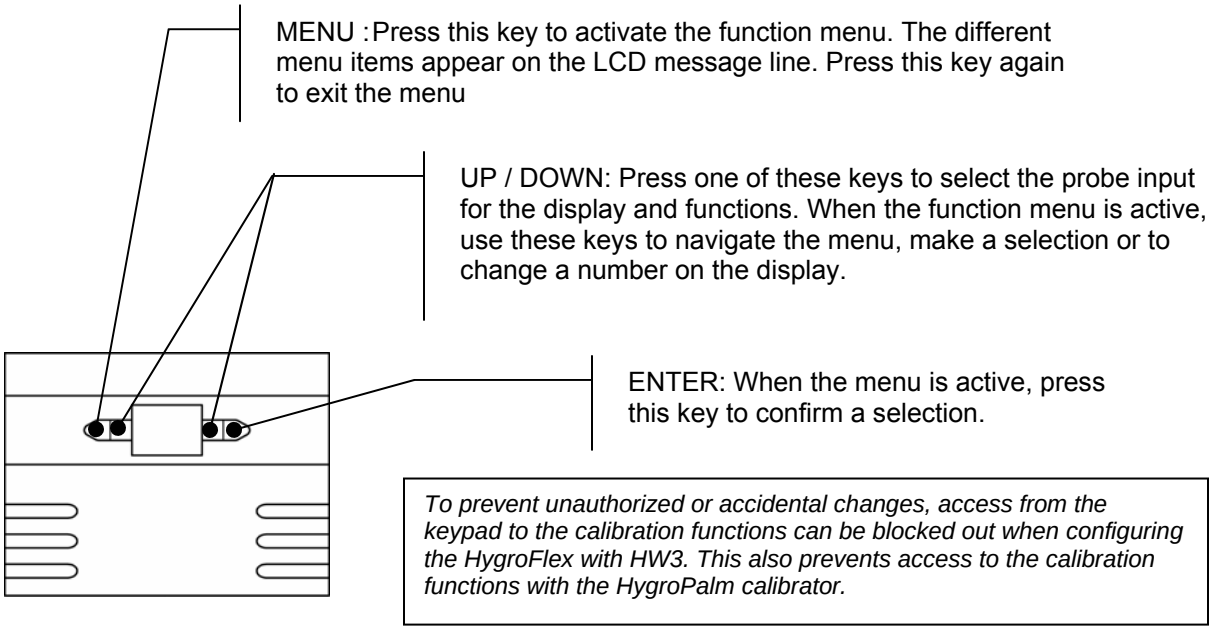

To prevent unauthorized or accidental changes, access from the keypad to the calibration functions can be blocked out when configuring the HygroFlex with HW3. This also prevents access to the calibration functions with the HygroPalm calibrator.

Installation

Each HygroFlex transmitter is shipped in an individual box, separately from the probe. The shipping box has a label with the following information: instrument type, main specifications and serial number. An identical label is located inside of the transmitter enclosure.

Installation of the Transmitter Enclosure

<u>Note</u>: see appendix 8 for the optional metal enclosure.

The HygroFlex is comprised of 5 parts: mounting bracket (1), electronics housing (2), main circuit board (3), connector plate (4) and front cover with or without optional display and keypad (5).

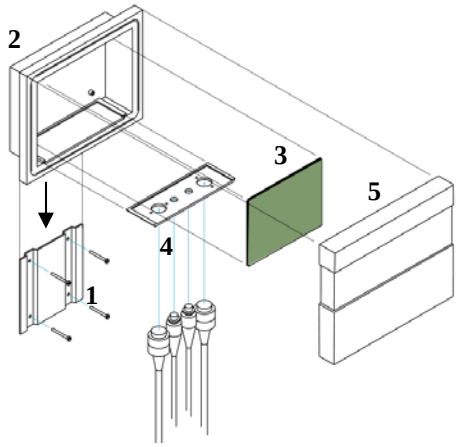

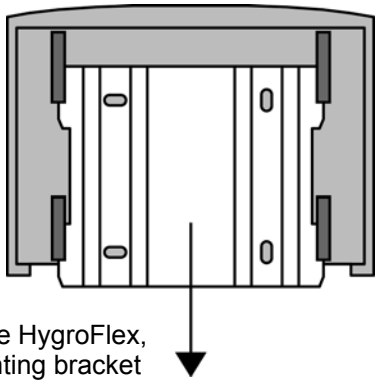

After unpacking the HygroFlex, separate the mounting bracket from the back of the housing.

To attach the transmitter to a mounting surface:

1) Attach the mounting bracket to the mounting surface above using 4 screws.
2) Slide the electronics housing down on the wall plate to the mechanical stop

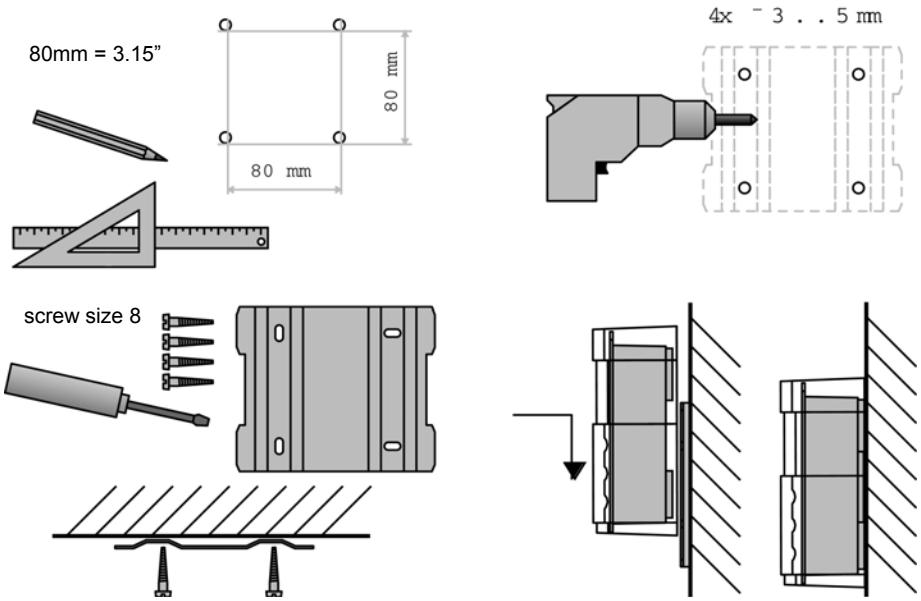

Front Cover Removal

The front cover is held in place by 4 small tabs molded into the electronics housing. To remove the cover, insert a screwdriver in the V-shaped slot on top of cover and press lightly to unlock prior to pulling the cover away from the electronics housing.

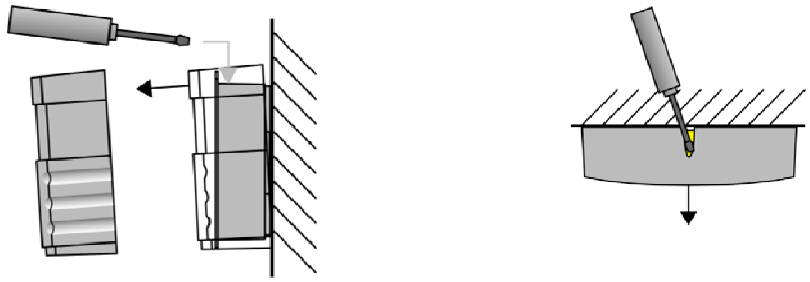

Note: If the cover has the optional display and keypad, it is connected to the main circuit board by a ribbon cable. When removing the front cover, this cable can easily become detached. This is nothing to worry about since the cable can be just as easily re-attached.

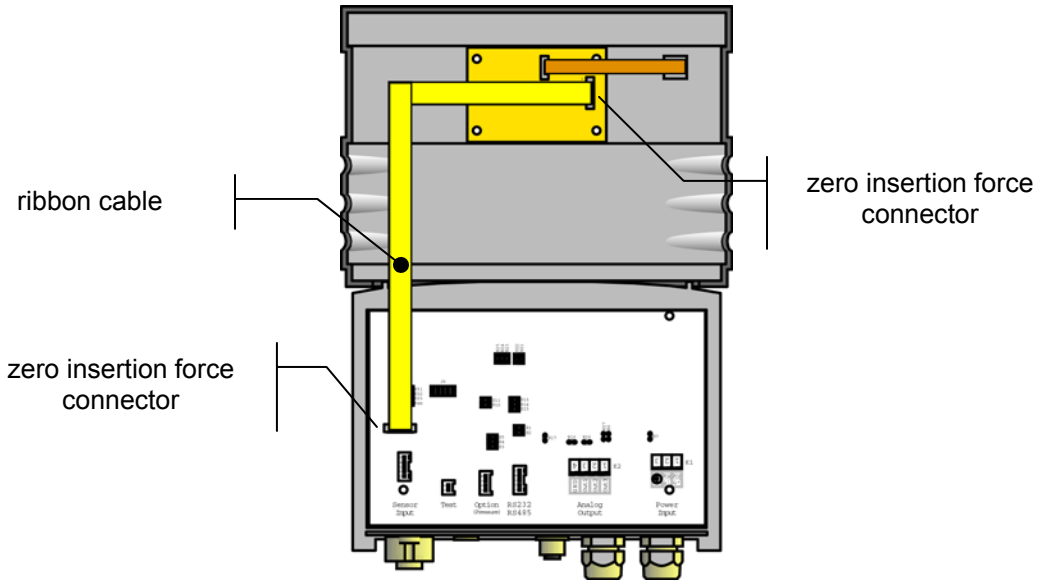

Front Cover Installation

To put the front cover back on the HygroFlex, proceed as shown below:

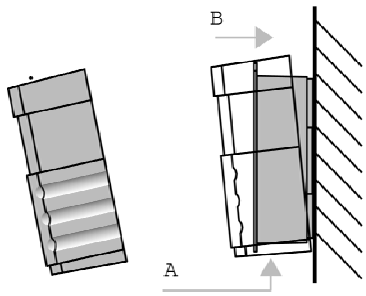

Re-attaching the ribbon cable (cover with optional Display and Keypad)

Zero-insertion-force connectors are used for the ribbon cable that connects the cover and the main printed circuit board.

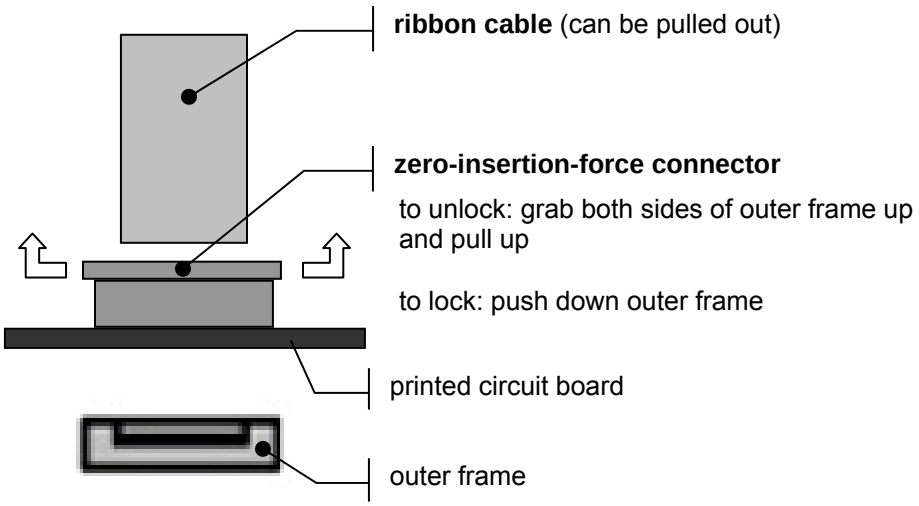

To re-attach the ribbon cable, unlock the connector (see above) and slide the cable back into the connector as indicated below. Lock the connector in place and verify the cable is firmly held in place.

Each end of the ribbon cable has a contact side and a blue insulated side. When inserting the cable in the connector, position the contact side of the flat ribbon cable as indicated below.

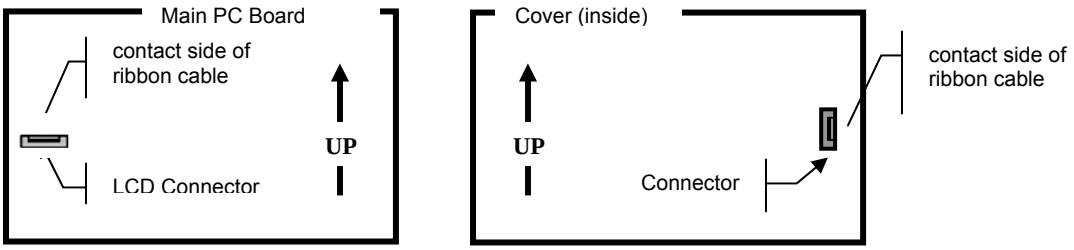

Note: disconnecting and reconnecting the ribbon cable while the transmitter is powered may cause the display to remain blank. In that case, un-power and power again the transmitter.

PCB Connectors

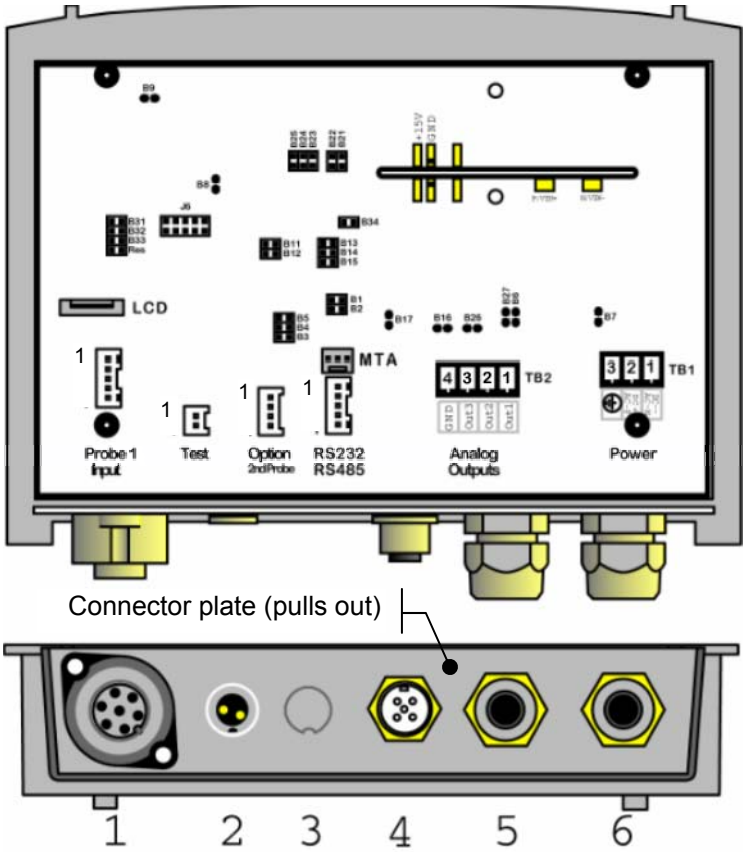

All terminal blocks are of the plug-in type so that the connector plate can be pulled out if required.

Cable grips (5 and 6) provide effective sealing only with cables having the proper outside diameter. Preferably, use a cable with an outside diameter of 6 to 7 mm (0.236 to 0.275") and with 18AWG wires. Seal any unused cable grip. *On request, the connector plate is available with 1/2" conduit adapters instead of cable grips.*

Ground the HygroFlex, especially if the electronics will be subjected to a low humidity environment (35 %RH or less). We also recommend running the analog output signal cable separately from the power cable.

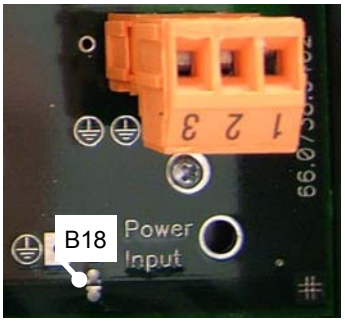

1- Main Probe Input (J2)

1 : Temperature (analog +)
2 : Humidity (analog +)
3 : GND
4 : Digital Input Output
5: +VDC

2 - Test (J4) - for HygroPalm Calibrator

1 : GND
2 : Digital Input Output

3 - Optional 2nd Probe Input (J3)
(except HygroFlex 1)
1 : Analog Input Signal (+)
2: GND
3 : Digital Input Output
4 : +VDC

4 - RS232/RS485 (J5)
(except HygroFlex 1)

1 : RI – (485)
2 : RI + (485)
3 : GND
4 : RX
5 : TX

5 - Analog Outputs (K2 / TB2)
(except HygroFlex 2)

1 : Out 1 (+)
2 : Out 2 (+)
3 : Out 3 (+) – HygroFlex 3 only
4 : GND (common)

6 - Power (K1 / TB1)
(check label inside enclosure)

1 : AC N or DC –
2 : AC Ph or DC +
3 : GND (see note below)

MTA : service / configuration connector
connect to PC with cable AC1623

Note that all input / output signal grounds - analog and digital - are tied together.

Starting with PCB version 66.0738.0402, there is no connection between signal ground and terminal 3 of the power terminal block TB1. If so desired, a connection can be established by closing solder pad B18, next to TB1. On previous versions of the PCB, the signal ground and terminal 3 of TB1 are always tied together.

Connector Pin-Out Diagrams

Note: the contact side of the female connector is the same as the solder side of the matching male connector.

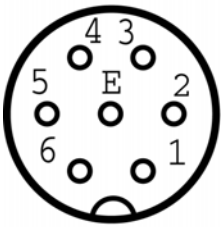

Probe 1 – TUCHEL T7 (7-pin female shown from contact side)

Pin #	Function	Pos. on Terminal Block (PCB)
E	GND	3
1	Temperature – analog (+)	1
3	DIO (digital)	4
5	+ VDC	5
6	Humidity – analog (+)	2

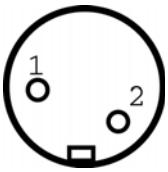

Test Connector (2-pin female shown from contact side)

Pin #	Function	Pos. on Terminal Block (PCB)
1	DIO (digital)	2
2	GND	1

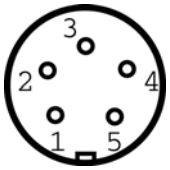

Probe 2 (5-pin female shown from contact side) – optional

Pin #	Function	Pos. on Terminal Block (PCB)
2	+ VDC	4
3	GND	2
4	DIO (digital)	3
5	Analog (+)	1

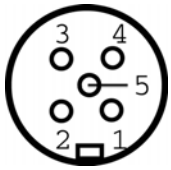

RS232 / RS485 (5-pin female shown from contact side)

Pin #	Function	Pos. on Terminal Block (PCB)
1	TXD	5
2	RXD	4
3	GND	3
4	RI +	2
5	RI -	1

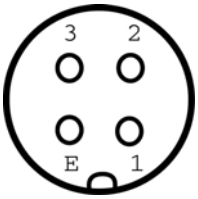

Analog Outputs (4-pin female shown from contact side) – optional

Pin #	Function	Pos. on Terminal Block (PCB)
1	Output 1 (+)	4
2	Output 2 (+)	3
3	Output 3 (+)	2
4	GND	1

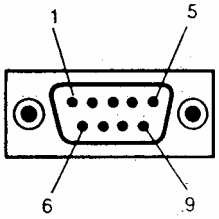

RS232 connection (DB9 female connecting to a PC or terminal server)

Pin #	Function
2	TX
3	RX
5	GND

Electrical Diagrams (analog outputs)

Before making the electrical connections, be sure to correctly identify each connector and terminal. Applying power to any of the input or output terminals can severely damage the transmitter.

12 to 35 VDC or 12 to 24 VAC supply voltage and voltage output signals

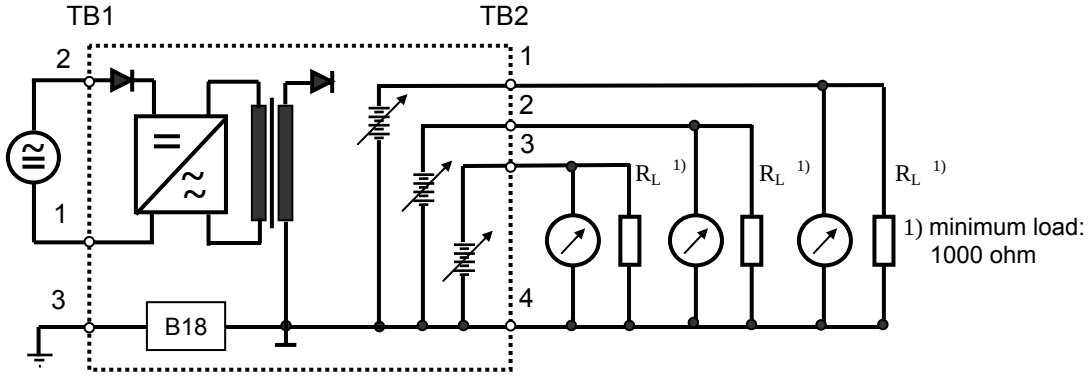

Solder pad B18: see bottom of page 13

TB1 (1)	12…35 VDC (-) or 12…24 VAC neutral	TB2 (1)	Relative humidity (+)
TB1 (2)	12…35 VDC (+) or 12…24 VAC Ph	TB2 (2)	Temperature (+)
TB1 (3)	Ground	TB2 (3)	Calculated Parameter (+)
		TB2 (4)	Common (-)

Output cable: cable resistance should not be more than 1/1000 of the load resistance.

90…264 VAC with optional power module and current output signals

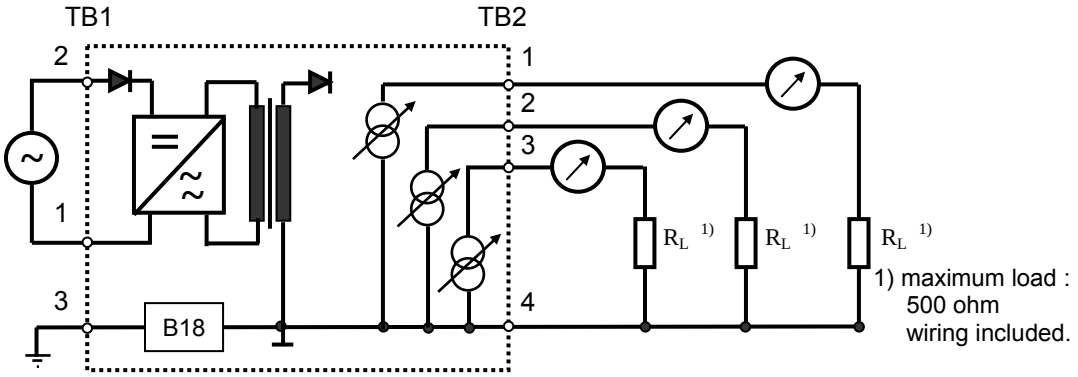

Solder pad B18: see bottom of page 13

TB1 (1)	90…264 VAC Neutral	TB2 (1)	Relative humidity (+)
TB1 (2)	Phase	TB2 (2)	Temperature (+)
TB1 (3)	Ground	TB2 (3)	Calculated Parameter (+)
		TB2 (4)	Common (-)

Floating Current Outputs (option)

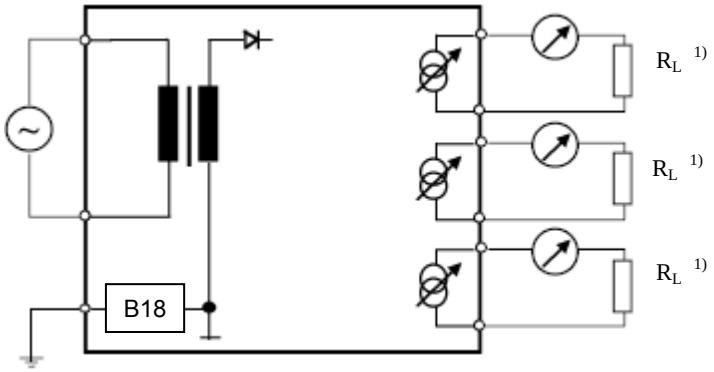

1) maximum load : 500 ohm, wiring included

Solder pad B18: see bottom of page 13

Configuration of the Analog Outputs

On the HygroFlex 1 and HygroFlex 3, the **type of output signal** can be selected by means of two jumpers for each output. These jumpers are located on the PCB of electronics module:

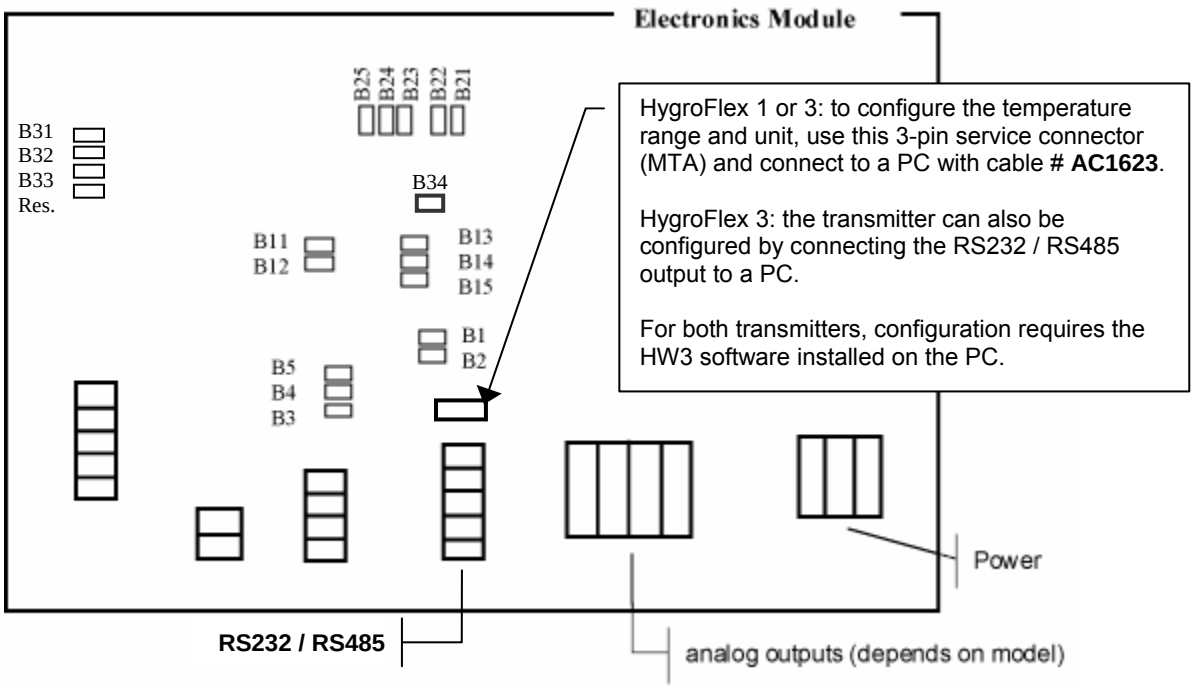

Signal	OUT 3 1)	OUT 2	OUT 1
0…1 V	B2, B3, B31	B22, B23, B31	B12, B13, B31
0…5 V	B2, B4, B32	B22, B24, B32	B12, B14, B32
0…10 V	B2, B5, B31, B32	B22, B25, B31, B32	B12, B15, B31, B32
0…20mA	B1, B3, B33, B34	B21, B23, B33, B34	B11, B13, B33, B34
4…20mA	B1, B3, B31, B33, B34	B21, B23, B31, B33, B34	B11, B13, B31, B33, B34

1) HygroFlex 3 only

The scale (or range) of each analog output can be changed with the HW3 software (see separate instructions). On the HygroFlex 3, the parameter corresponding to the third output can also be changed with the HW3 software (see separate instructions).

Electrical Installation Guidelines

Please see **Appendix 10** for general guidelines regarding the electrical installation of this product.

Serial Network Configuration (HygroFlex 2 and HygroFlex 3 only)

Prior to networking the transmitters, they should be individually configured with the HW3 software (see separate instructions on the HW3 CD ROM). Proceed as follows:

1) Connect each transmitter, one at a time, to the COM port of the PC (see also note below)

2) **Assign to each transmitter a unique network address** (a number between 0 and 31). By default, all transmitters are shipped by the factory with address 0.

   Note: if you assign address 1 to the first transmitter, you can connect a second transmitter (with the 0 default address) to the network and then use the network to directly change its address from 0 to 2. Proceed in this manner to add more transmitters one at a time, using addresses 3, 4, 5, etc.

3) For easier identification, you may also want to give at that time a descriptive name (maximum 30 characters) to each transmitter.

Serial Network

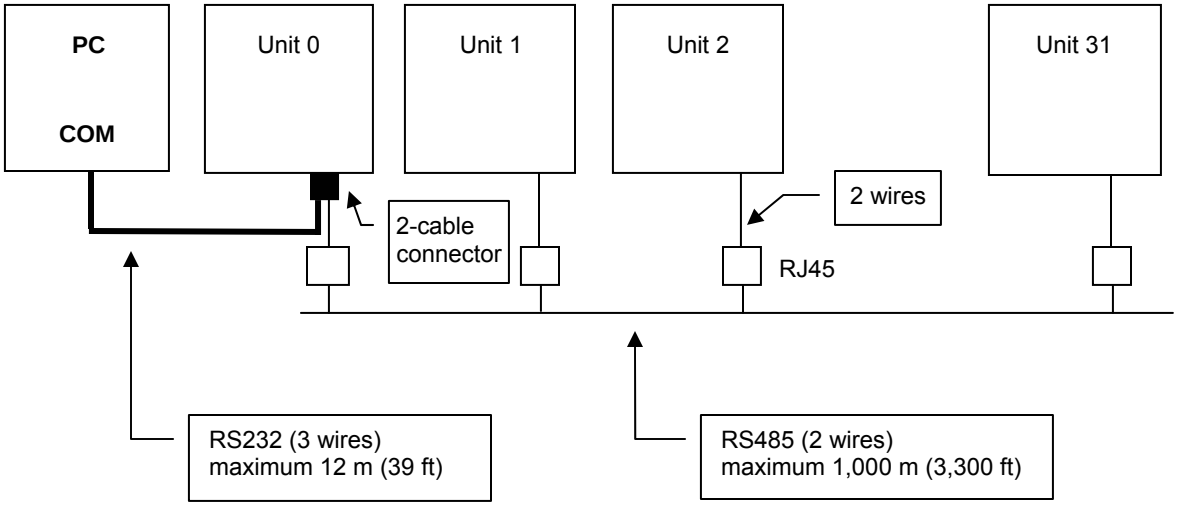

The RS232 connection between the HygroFlex and a PC requires 3 wires: RX, TX and GND [1]. Without a signal booster, the maximum cable length is limited to 12 m (39 ft). The RS485 connection requires two wires and should not exceed a total of 1,000m / 3,300 ft.

1) See bottom of page 13

Each HygroFlex 2 or 3 is supplied with a 2-cable, 5-pin connector (see Connector Diagrams). On the first unit of a serial network, both the RS232 and RS485 wiring share this connector. Be sure to observe the polarity for each connection. Wall mounted RJ45 receptacles are a convenient means of connecting additional units to the RS-485 cable.

Please see also **Appendix 10** for additional guidelines regarding the RS-485 wiring installation.

Probe Installation Guidelines

Connect the probe to probe input 1 (main probe input). Except for probe model IW (area monitoring), probes are connected to the HygroFlex by means of a cable (attached to the probe).

Do not remove the dust filter or slotted cap from the probe. Both sensors can easily be damaged when not protected.

For best results, please observe the following guidelines:

- Install the probe at a location where humidity, temperature and pressure conditions are representative of the environment or process to be measured. Avoid the following: (a) Close proximity of the probe to a heating element, a cooling coil, a cold or hot wall, direct exposure to sun rays, etc. (b) Close proximity of the probe to a steam injector, humidifier, direct exposure to precipitation, etc. (c) Unstable pressure conditions resulting from excessive air turbulence.

- If possible, choose a location that provides good air movement at the probe: air velocity of at least 1 meter/second (200 ft/ minute) facilitates adaptation of the probe to changing temperature.

- When installing the probe through a wall, immerse as much of the probe as possible in the environment to be measured.

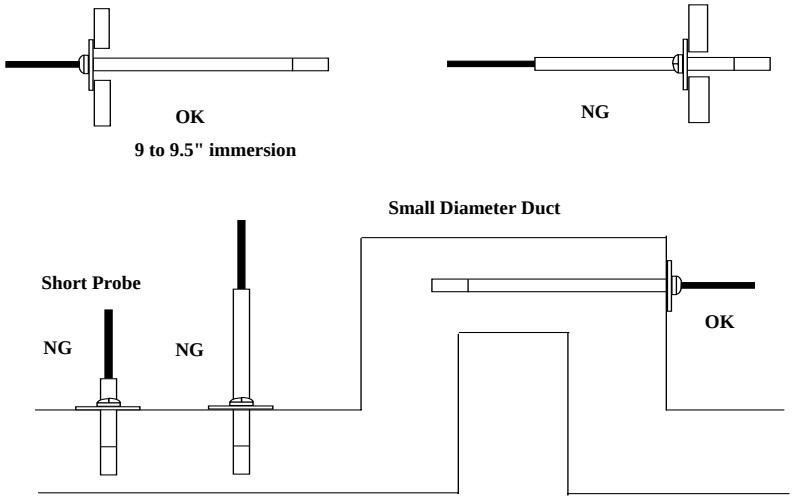

Position the probe so as to prevent the accumulation of condensation water at the level of the sensor. Install the probe so that the probe tip is looking downward. Only if this is not possible, install the probe horizontally.

Depending on the probe model, using a probe holder (mounting flange with a compression fitting) can facilitate installation through a wall.

HygroFlex Function Menu

The functions of the HygroFlex can be accessed either with the optional display and keypad or by connecting a HygroPalm indicator to the Test connector of the HygroFlex (see Remote Mode). Some functions, including all calibration functions, can also be accessed with the HW3 software.

To access the function menu from the HygroFlex keypad, press the MENU key. The first menu item appears on the message line of the LC display. Use the UP or the DOWN key to navigate the menu. When the desired menu item appears on the message line of the LC display, press the ENTER key to select. Some menu items have sub-items. These can be selected with the UP, DOWN and ENTER keys. To exit the menu and return to the normal display mode, press the MENU key. The instrument also returns automatically to the normal display mode when no key is being pressed for some time (main menu: 10 sec., submenu: 30 sec.).

CALCULATE (HygroFlex 2 and HygroFlex 3)

Definition

This function is used to select the humidity parameter that is calculated and displayed by the instrument [1)] . Any selection made here has no effect on analog output #3 (computed parameter) of the HygroFlex 3. Use the HW3 software to change the computed parameter sent this output.

1) does not apply to third-party analog probes.

The calculated parameter is selected individually for each probe connected to the instrument [1)]. Prior to entering this function, select on the display the probe input to be programmed.

The unit system (**M**etric or **E**nglish) is factory programmed according to what was specified when the instrument was ordered. The unit system can be selected with the optional HW3 software (see separate instructions) .

Selections

Parameter	M	E	HygroFlex 1	HygroFlex 2	HygroFlex 3
Dew Point / Frost Point [1)]	°C	°F	N/A	x	x
Wet Bulb Temperature [2)]	°C	°F	N/A	x	x
Enthalpy [2)]	J/g	BTU/lb	N/A	x	x
Vapor Concentration	g/m^3	gr/cuft	N/A	x	x
Specific Humidity [2)]	g/kg	gr/lb	N/A	x	x
Mixing Ratio [2)]	g/kg	gr/lb	N/A	x	x
Vapor Concentration at Saturation	g/m^3	gr/cuft	N/A	x	x
Partial Pressure of Water Vapor	hPa	PSI In Hg	N/A	x	x
Saturation Pressure of Water Vapor	hPa	PSI In Hg	N/A	x	x

1) The standard factory setting is frost point for values below freezing. This setting can be changed to dew point with the optional HW3 software
2) Calculation of this parameter requires barometric pressure as an input. The fixed value used for barometric pressure can be changed with the optional HW3 software. Both the HygroFlex 2 and HygroFlex 3 can also be programmed to accept the input from a pressure probe (variable pressure value).

DISPLAY (HygroFlex 2 and HygroFlex 3 with optional LC display)

Definition

This function is used to select which parameters are displayed by the instrument. The display mode is specified globally for all humidity probes connected to the instrument.

HygroFlex 3: the display selection has no effect on the analog outputs.

Selections

- **Measurement**

  Relative humidity and temperature or the parameter measured by any third party probe connected to the instrument.

- **Calculated + Temperature**

  Calculated parameter (as selected under CALCULATE) and temperature. This selection is not available with third-party probes.

- **Calculated + Humidity**

  Calculated parameter (as selected under CALCULATE) and relative humidity. This selection is not available with third-party probes.

- **User Calc**

  User defined calculation such as the difference between temperature and dew point of any probe. The display shows only the calculated value. See the separate HW3 manual for instructions on how to program the HygroFlex 2 or 3 to compute a user specified parameter.

ADJUST M.PT (multi-point adjustment against a reference environment)

Definition

The Adjust M.PT function permits to adjust a ROTRONIC HygroClip digital probe at 2 temperature values and at up to 4 relative humidity values. *To prevent unauthorized or accidental changes, lock the keypad (software configuration with HW3) to block out access to this function either from the keypad or from the HygroPalm calibrator.*

Selections

The Adjust M.PT function offers the following choices (use the UP and DOWN keys):

RHS: Humidity adjustment using the ROTRONIC Humidity Standards [1)]
Humidity: Humidity adjustment using any suitable reference environment
Temperature: Temperature adjustment using any suitable reference environment

1) For humidity calibration / adjustment, ROTRONIC offers convenient, certified humidity standards to generate known humidity values (for more details, see Appendix 3 - Humidity Calibration).

Procedure

When two probes are connected to the transmitter, select (display) the HygroClip probe to be adjusted prior to entering the function. When using the Adjust M.PT function, it is important to observe the following rules:

a) When both temperature and humidity are to be adjusted, temperature should be adjusted first because it is an input value for the temperature compensation of the humidity sensor.

b) Always adjust the probe first at the low value (T-low). Any temperature below 70°C (158°F) is assumed to be T-low and is used to compute the offset. The gain is computed from the high temperature value (T-high), using 20°C as a fixed pivot point. Because of this, T-low should be as close as possible to 20°C (68°F) so as not to introduce an error. Any temperature ≥ 70 °C (158 °F) is automatically assumed to be T-high. The difference between T-high and T-low should be at least 50 °C (90 °F).

c) When adjusting humidity (2, 3 or 4 points) with the ROTRONIC humidity standards, always follow the sequence 35 %RH, 80 %RH, 10 %RH or 5 %RH, 0 %RH. When using a reference other than the ROTRONIC humidity standards, adjust against reference humidity values that are within the following brackets. Be sure to observe the sequence since each adjustment point influences the next adjustment point:

>25 %RH…≤55 %RH	: used to compute the calibration offset
>55 %RH	: used to compute the calibration gain
>1 %RH…≤25 %RH	: sensor linearity adjustment
≤ 1 %RH	: sensor linearity adjustment

The HygroFlex automatically recognizes these brackets. Any value between 25 and 55 %RH is automatically used to compute the offset. Any value higher than 55 %RH is used to compute the gain, based on a fixed pivot point of 35 %RH. Because of this, the first adjustment value should be as close as possible to 35 %RH so as not to introduce an error.

When the probe is at equilibrium with the reference environment, activate the Adjust M.PT function and make the appropriate selections:

a) **RHS**: press the ENTER key to select this item. The LC display shows the value read by the probe at the time the ENTER key was pressed. The letters “RHS” are displayed on the message line. Use the UP or the DOWN key to change the humidity value to match the mean value (at 23°C) written on the certificate supplied with the standard. For a faster change, keep the key pressed down. Press the ENTER key when done.

   Note: in the RHS mode, the software automatically compensates for the effect of temperature on the humidity standard. No additional correction is required.

b) **Humidity or Temperature**: press the ENTER key to select. The LC display shows the value read by the probe at the time the ENTER key was pressed. The word “humidity” or “Temperature” is shown on the message line. Use the UP or the DOWN key to change the humidity or temperature value to match the value of the reference environment. For a faster change, keep the key pressed down. Press the ENTER key when done.

After pressing the ENTER key, the message “sure?” should appear on the LC display. Press ENTER to confirm. Next, the LC display will confirm that the probe adjustment has been successfully completed. At that time, press ENTER to exit or MENU to return to the function Adjust M.PT and do another calibration point.

Carry on in the same manner for each calibration point, following the sequence described above.

Note: you can exit the function at any time (without calibrating the probe) by pressing the MENU key.

ADJUST 1PT (1-point adjustment against a reference environment)

Definition

The Adjust 1PT function permits to do a 1-point adjustment (temperature or humidity) of a ROTRONIC HygroClip digital probe against a known reference environment. This function is limited to a simple offset adjustment that is applied across the entire measuring range. Note that when both temperature and humidity are to be adjusted, temperature should be adjusted first. *To prevent unauthorized or accidental changes, lock the keypad (software configuration with HW3) to block out access to this function either from the keypad or from the HygroPalm calibrator.*

Warning: a 1-point adjustment is no substitute for an adjustment at 2 or more points. Adjusting the probe at only one value can improve accuracy over a narrow range of conditions and may also be detrimental to accuracy at other conditions.

Selections

The Adjust 1PT function offers the following choices (use the UP and DOWN keys):

RHS: Humidity adjustment using the ROTRONIC Humidity Standards [1)]
Humidity: Humidity adjustment using any suitable reference environment
Temperature: Temperature adjustment using any suitable reference environment

1) For humidity calibration / adjustment, ROTRONIC offers convenient, certified humidity standards that generate known humidity values (for more details, see Appendix 3 - Humidity Calibration).

Procedure

When two probes are connected to the transmitter, select (display) the HygroClip probe to be adjusted prior to entering the function.

When the probe is at equilibrium, activate the Adjust 1PT function and make the appropriate selections:

a) **RHS**: press the ENTER key to select this item. The LC display shows the value read by the probe at the time the ENTER key was pressed. The letters “RHS” are displayed on the message line. Use the UP or the DOWN key to change the humidity value to match the mean value (at 23°C) written on the certificate supplied with the standard. For a faster change, keep the key pressed down. Press the ENTER key when done.

   Note: in the RHS mode, the software automatically compensates for the effect of temperature on the humidity standard. No additional correction is required
   .

b) **Humidity or Temperature**: press the ENTER key to select. The LC display shows the value read by the probe at the time the ENTER key was pressed. The word “humidity” or “Temperature” is shown on the message line. Use the UP or the DOWN key to change the humidity or temperature value to the value of the reference environment. For a faster change, keep the key pressed down. Press the ENTER key when done.

After pressing the ENTER key, the message “sure?” should appear on the LC display. Press ENTER to confirm. Next, the LC display will confirm that the probe adjustment has been successfully completed. At that time, press ENTER to exit.

Note: you can exit the function at any time (without calibrating the probe) by pressing the MENU key

ADJUST REF (1-point adjustment against a reference probe)

Definition

Note: this function is not available with the HygroFlex 1 (single probe input).

When two ROTRONIC HygroClip digital probes are connected to the HygroFlex, the Adjust REF function permits to do a 1-point adjustment (both humidity and temperature) of probe 1, **using probe 2 as a reference**. *To prevent unauthorized or accidental changes, access from the keypad to this function can be blocked out (software configuration with HW3).*

Warning: a 1-point adjustment is no substitute for a full calibration (2 or more points). Doing a 1-point adjustment can improve accuracy over a narrow range of conditions and may also be detrimental to accuracy at other conditions.

Procedure

Expose both probes to the same stable environment. Ventilation of the probes is highly recommended. Observe the readings from both probes for complete equilibration with the reference environment .

Press the ENTER key to enter the function. The display asks you to wait for a short time and then shows the humidity and temperature read by the reference probe at the time the ENTER key was pressed. Note that these values are not updated to the display as long as the function is active. The message line of the display shows REF = Probe 2, indicating that probe 2 is the reference.

Press the ENTER key to accept. After pressing the ENTER key, the message “sure?” should appear on the LC display. Press ENTER to confirm. Next, the LC display will confirm that the probe adjustment has been successfully completed. At that time, press ENTER to exit.

Note: you can exit the function at any time (without calibrating the probe) by pressing the MENU key.

PROBE

Definition

This function displays the version number and serial number of any ROTRONIC HygroClip digital probe connected to the instrument.

Procedure

Prior to entering the function, select the probe to be displayed (this is the same as the probe that was last displayed). When entering the function, the version number of the probe is displayed first. Use the UP or the DOWN key to display the serial number of the probe.

SETTINGS

Definition

This function is used to do the following:

- turn the trend indicators on or off
- change the symbol used for relative humidity

Procedure

Trend: use the UP or the DOWN key to enable or disable the trend indicators.

The trend of humidity and temperature is shown on the display by an arrow (up or down) to the left of the measured value. Both arrows are shown to indicate stable conditions. Stable conditions are defined as rate of change of less than 0.02 %RH / min or °C / min.

Signal stability is first evaluated after 60 seconds into the measurement and is updated every 30 seconds.

HygroFlex 2 and 3: when the trend indicator is enabled, the symbol for the calculated parameter (e.g. Dp for dew point) is no longer displayed to the left of the numerical value.

Humi Unit: use the UP or the DOWN key to change the symbol used for relative humidity (depends on country and language).

SYS STATUS

Definition

This function displays the software version of the instrument, the RS232 configuration * (baud rate, parity, bits and stop bit), the network address *, any user defined description for the instrument * and the serial number of the instrument.

* except HygroFlex 1

This information is for display only. Some parameters such as the network address can be changed with the HW3 software, after connecting the instrument to a PC.

Procedure

When entering the function, the software version number is displayed first. Use the UP or the DOWN key to display the other data.

OUTPUT

Definition

This function displays the values sent to each analog output. The display shows the values at the time the menu key was pressed and these values are not updated to the display as long as the function is active. This allows the values to be correctly compared. The analog output signals keep being updated.

Procedure

When entering the function, analog output 1 is displayed first. Use the UP or the DOWN key to display the other outputs.

Errors and Status Messages

The following is a list of coded messages (101, etc.) that the HygroFlex may show on the bottom line of the optional LC display or via RS232 / RS485.

Errors:		
101	checksum error	the checksum test did not pass during RS-communication.
102	bad command	an unknown command was received
103	disallowed command	a command was received that is reserved for production and service
104	unknown probe input	reference was made to a non-existing analog or digital probe input
105	argument error	error in the number of the arguments in the command or in the value of one of the arguments
106	HygroClip communication error	the HygroClip probe does not answer or is not connected
107	calibration error	the difference between the probe reading and the calibration point is larger than the maximum allowed by the INI command.
108	calibration error (overflow)	internal probe error (or the difference between the probe reading and the calibration value is too large)
110	unknown reference probe	the reference probe is not connected or the reference probe input does not exist
111	Temperature error	During humidity calibration, temperature should be within the limits of 0 and 80°C (32 and 176°F)

Warnings:		
120	no adjustment	calibration
121	No HygroClip probe is connected	

Status:		
130	the probe was adjusted	calibration

Test connector for the HygroPalm Indicator

Definition

The test connector permits to connect a HygroPalm indicator to the HygroFlex (the HygroPalm goes automatically into its Remote Control Mode). This is especially useful when the transmitter does not have the optional display and keyboard. Depending on the model of HygroPalm, the Remote Control mode allows the following:

	HygroPalm 1	**HygroPalm 2**	**HygroPalm 3**
Display the readings from any probe connected to the transmitter	**x**	**x**	**x**
Display the transmitter status (configuration, serial number, etc.)	N/A	**x**	**x**
1-point adjustment of any ROTRONIC HygroClip digital probe connected to the transmitter, using the probe connected to the HygroPalm as a reference	N/A	**x**	**x**
Access the functions [1)] of the transmitter, primarily the ADJUST M.PT function - see Functions.	N/A	N/A	**x**

1) except for CALCULATE and DISPLAY

Procedure

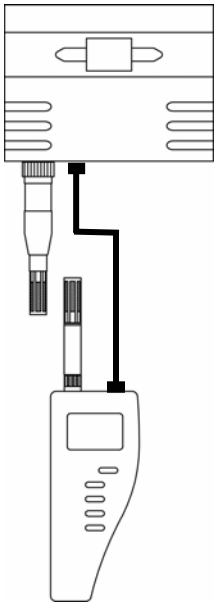

The Remote Control mode is automatically activated by connecting any probe input of the HygroPalm to the Test port of the transmitter:

HygroPalm 1: remove the probe and replace it with cable # **AC1621**
HygroPalm 2 and 3: connect cable #**AC1620** to the second probe input

As soon as the two instruments are connected, the HygroPalm detects the transmitter and this is indicated by a flashing star on each side of the LC display. At that time, the display of the HygroPalm shows data from the remote unit and can no longer be used to access local data from the HygroPalm. Similarly, the function keys of the HygroPalm control the transmitter and not the HygroPalm itself. To exit the Remote Control mode, simply disconnect the two instruments.

Notes:

Using the Remote Control mode does not disturb the output signals (analog or digital) of the transmitter. The outputs keep being normally updated.

The HygroPalm cannot be turned off while in the Remote Control Mode.

Display the Probe Measurements

As soon as the Remote Control mode is initiated, the HygroPalm displays the measurements from the probe(s) connected to the transmitter. When two probes are connected to the transmitter, each probe can be displayed with the UP or DOWN key on the HygroPalm.

Functions (except ADJUST M.PT and ADJUST 1PT)

Press the MENU key of the HygroPalm to access the functions of the transmitter and use the UP and DOWN keys to navigate the function menu. Selections are confirmed by pressing the ENTER key.

Access to the functions depends on the model of HygroPalm. The functions CALCULATE and DISPLAY are generally not accessible in the Remote Control mode. For more details see **HygroFlex Function Menu**

Functions ADJUST M.PT and ADJUST 1PT

The functions ADJUST M.PT [1)] and ADJUST 1PT [1)] can be accessed only with the HygroPalm 3. In the remote mode, both the display and the keyboard of the HygroPalm act like if they were the display and keyboard of the transmitter. The definition of these functions and the procedure to be followed are the same as already described under **HygroFlex Function Menu**.

1) applies only to the ROTRONIC HygroClip digital probes

Function ADJUST REF

In the Remote Control Mode, the function Adjust REF can be used to do a 1-point adjustment of the ROTRONIC HygroClip probe(s) [1)] connected to the transmitter against the probe connected to the HygroPalm indicator. The function adjusts both humidity and temperature simultaneously.

The following choices are available for the reference probe:

a) REF = PALM: to access this function, a probe must be connected to one of the HygroPalm probe inputs. The other probe input of the HygroPalm is already used to connect to the TEST port of the transmitter The reference is the probe connected to the HygroPalm.

   HygroFlex 2 or 3 with second probe option: when 2 probes are connected to the HygroFlex, the probe that was displayed on the HygroPalm prior to entering the function menu will be adjusted.

b) REF = FLEX (HygroFlex 2 or 3): this is available only when the HygroFlex has 2 probe inputs and the reference is always the probe connected to input 2 of the HygroFlex. Probe 1 will be adjusted (1-point) to match probe 2. Probe 2 cannot be adjusted against probe 1.

1) When no such probe is detected, the message “connect fail” will be displayed.

Press MENU and use the UP or the DOWN key to access Adjust REF from the function menu. Press ENTER to select this function.

After pressing the ENTER key, the display of the HygroPalm shows the relative humidity and temperature data from the reference probe. When the HygroFlex has 2 probes, use the UP or the DOWN key to select either REF = PALM or REF = FLEX. The data on the display is the data read by the reference probe at the time the ENTER key was pressed. This data is not updated while the function Adjust REF is active (see Notes below).

Press the ENTER key to accept the reference data. The message “sure ?” should appear on the LC display. Press ENTER to do the 1-point adjustment of both humidity and temperature or press MENU to abort and exit this process. When the message “Adjust OK” appears, press ENTER to exit.

Notes:

Expose both probes to be to the same stable environment. Ventilation of both probes is highly recommended. Observe the readings from both probes for complete equilibration (this can be done by entering and exiting a few times the function Adjust REF so as to check both probes prior to adjusting).

If the transmitter has its own display, it simply repeats the data or commands shown on the display of the HygroPalm.

Environmental Limits

The HygroFlex can operate in the temperature range of –40...60°C (-40…140°F) and should not be exposed to condensing humidity. Units with the optional LC display and keypad should not be used below -30°C (-22°F).

The operating limits at the probe depend on the probe model and are specified separately for each probe.

Maintenance

On-Site Maintenance

a) Probe maintenance:

Each HygroFlex transmitter has a test connector that is located on the connection plate. The HygroPalm 2 and HygroPalm 3 portable indicators can be connected to this connector with cable **AC1620**. Using the probe of the HygroPalm as a reference, any HygroClip digital probe connected to the transmitter can be read and adjusted at one humidity and temperature value. When adjusting against a reference probe, please make sure that both probes are exposed to the exact same environment and are at temperature and humidity equilibrium. Ventilation of both probes (same air stream) is highly recommended.

b) Validation of the analog outputs

With the exception of the analog probe input and analog output circuits, the HygroFlex uses digital circuits that are by nature immune from drift. The HygroFlex uses analog circuits that are very stable. These circuits should not exhibit any noticeable drift for many years. If so desired, the analog input and output circuits can be validated by substituting a test connector for the probe. The test connector **AC1618/50** simulates a HygroClip probe and generates digital and analog signals corresponding to 50%RH and 25°C (77°F). The output signals can be read with a DVM (open the transmitter housing and disconnect the analog output plug-in terminal block).

Factory / Metrology Lab. Maintenance

The HygroFlex should not require any routine maintenance other than validating the analog probe inputs (if used) and the analog outputs. Please, contact the factory if the analog outputs require an adjustment. See **appendix 3 and appendix 4** regarding the maintenance of the humidity temperature probes used with the HygroFlex.

Specifications

Operating Voltage	standard	12 to 35 VDC / 300 mA max. or 12 to 24 VAC
	optional	90 to 264 VAC 50/60 Hz
Operating limits at electronics		0…99 %RH (non condensing)
	w/o LC display	-40...60°C (-40...140°F)
	with LC display	-30…60°C(-22…140°F)
Measured parameters [1)]		
relative humidity	typical range	0…100 %RH
	indication range	0.0 to 100.0 %RH
temperature	typical ranges	0…100 °C, -50…150°C, 0…200°C 0…100 °F, -50…250°F, 0…400°F
	indication range	-99.9 to 999.9 °C or °F
barometric pressure [2)]	typical range	0…2000 hPa / 0…50 PSI / 0…100 InHg
	indication range	0.000 to 9999 hPa/PSI/InHg
Calculated parameters [1) 2)]		
dew / frost point [3)]	typical range	-50…100 °C / -50…200°F
	indication range	-99.9 to 999.9 °C or °F
wet bulb temperature [4)]	typical range	0…100°C / 0…200°F
	indication range	0.0 to 100.0°C / 32 to 212.0°F
enthalpy [4)]	typical range	-50…250 J/g or -50..150 BTU/lb
	indication range	-99.9 to 9999 J/g or BTU
vapor concentration	typical range	0…500 g/m3 or 0…250 gr/cuft
	indication range	0.000 to 9999 g/m3 or gr/cuft
specific humidity [4)]	typical range	0…500 g/kg or 0…4000 gr/lb
	indication range	0.000 to 9999 g/kg or gr/lb
mixing ratio [4)]	typical range	0…500 g/kg or 0…4000 gr/lb
	indication range	0.000 to 9999 g/kg or gr/lb
vapor concentration at saturation	typical range	0…500 g/m3 or 0…250 gr/cuft
	indication range	0.000 to 9999 g/m3 or gr/cuft
part. pressure of water vapor	typical range	0…500 hPa / 0…10 PSI / 0…20 InHg
	indication range	0.000 to 9999 hPa / PSI / InHg
sat. pressure of water vapor	typical range	0…500 hPa / 0…10 PSI / 0…20 InHg
	indication range	0.000 to 9999 hPa / PSI / InHg
System accuracy at 23°C/73°F		± 1% RH
with HygroClip probe & 4-point calibration		± 0.2°C / 0.4°F
Number of probe inputs	HygroFlex 1	1
	HygroFlex 2 and 3	1 (standard) or 2 (optional)
Probe type [5)]	all models	ROTRONIC HygroClip digital probe
	HygroFlex 2 and 3	ROTRONIC analog probe [6)] Third-party analog probe [6)]
Analog outputs (scalable)	HygroFlex 1	2: relative humidity and temperature
	HygroFlex 3	3: relative humidity, temperature and calculated parameter [7)]
Analog signals (selectable)	HygroFlex 1 and 3	0…1V, 0…5V, 0…10V 0…20 mA, 4…20 mA
Minimum load for voltage outputs		1000 ohm
Maximum load for current outputs		500 ohm

Serial output [8]	HygroFlex 1	RS232 (internal service connector)
	HygroFlex 2 and 3	RS232 / RS485 (external connector)
Electrical Connections	power	cable grip and terminals [9]
	analog outputs	cable grip and terminals [9]
	serial output	connector [10]
	probe input(s)	connector [11]
Optional LC display and keypad		alphanumerical, 0.000…9999
		membrane keypad
Housing Material		ABS (standard)
		metal (option)
Housing Dimensions		207 x 150 x 59 mm (8.15 x 5.91 x 2.32”)
Weight		800 g (1.76 lb)
Protection grade		IP65 / NEMA 4

1) Specify engineering units and range when ordering (both can be changed by user with optional HW3 software). See separate probe specifications regarding the different range limits
2) Not available with the HygroFlex 1. The accuracy of the computed parameter is limited by the accuracy of the measured parameters on which it is based
3) The standard factory setting is frost point for values below freezing. This setting can be changed to dew point with the optional HW3 software
4) A fixed value is used for the computations of this parameter. The fixed pressure value can be changed by the user with the optional HW3 software. The HygroFlex can also be programmed to accept the input from a pressure probe (variable pressure value)
5) Accuracy, repeatability and operating limits are specified separately for each model of probe
6) ROTRONIC analog probes: because the HygroFlex cannot read a negative input voltage, temperature measurement with probes having a standard output is generally limited to values above freezing. Third-party probe (pressure or other): linear voltage output signal within the range of 0..2.5 VDC, supply voltage 15 VDC, 10 mA
7) The span of the computed parameter should be determined under consideration of the D/A resolution of the corresponding analog output (12-bit is standard for output # 3). Depending on the desired signal resolution, a wide span may require using the optional 16-bit D/A converter for output 1 and assigning the computed parameter to this output.
8) RS485 network: requires the first transmitter to be connected to the RS232 COM port of a PC
9) ½” conduit adapters or connectors also available. Recommended cable for cable grips: 7..9 mm diameter (0.275..0.354”) with 18 AWG wires. Cable for output signals should preferably be shielded.
10) This is a 5-pin connector that is shared by the RS232 and RS485 signals. A matching 2-cable connector is supplied with the transmitter
11) Supplied with the probe

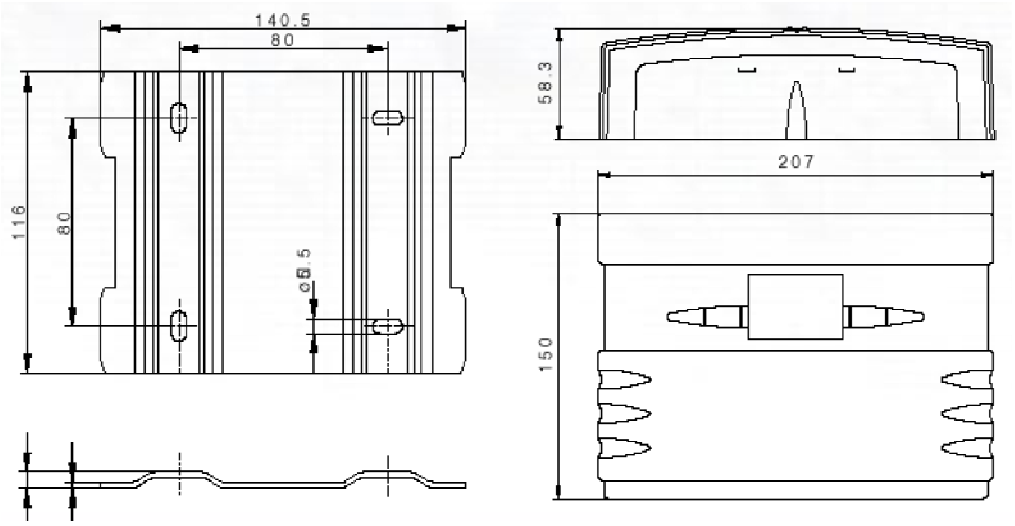

Dimensions in mm

Appendix 1: Practical Advice for Measuring Humidity

The most common source of error when measuring relative humidity is a difference between the temperature of the probe and the temperature of the environment. At a humidity condition of 50 %RH, a temperature difference of 1°C (1.8 °F) typically results in an error of 3 %RH on relative humidity.

Avoid temperature errors by inserting as much of the probe as possible in the environment to be measured. If the probe is short, you may have to insert not only the probe itself but also some of the probe cable. Use the probe configuration that fits best for your application. Please also note that some probes such as the HygroClip IE (measurement in compressed air) are not designed to handle any significant temperature gradient between both sides of the mounting wall.

In extreme situations, condensation may occur on the sensors when the probe is colder than the environment. As long as the humidity / temperature limits of the humidity sensor are not exceeded, condensation does not alter the calibration of the sensor. However, the sensor has to dry out before it can provide a valid measurement.

Non-moving air is an excellent insulator. When there is no air movement, surprising differences in temperature and humidity can noted over short distances. Air movement at the probe generally results in measurements that are both faster and more accurate.

Appendix 2: Resolution of the Analog Signals

The HW3 software allows defining the range of the analog output signals of the HygroFlex 3. When selecting a range, it is important to consider the fact that the resolution of the analog output signal depends on the span of the selected range.

The HygroFlex 3 uses two 12-bit D/A converters to generate the analog output signals for relative humidity (output #1) and for the computed parameter (output #3). In theory, a 12-bit D/A converter can distinguish between 4,096 values (or counts). This number of counts, together with the span of the signal (%RH, °C, etc.), determines the resolution of the analog output signal.

Because of the tolerance in the analog components associated with the D/A converter, the number of counts that are effectively used tends to be less than the theoretical maximum. Typically, only about 90% of the counts (3,680) may be effectively used.

In addition, the analog output signal may be a partial range. For example, 4…20 mA is a partial range of 0…20 mA. With a 4…20 mA output signal, the number of useful D/A counts is further reduced by 20% (1 - 16/20) and only 72% of the count (2,950 counts) may be effectively available.

Taking the example of a 4…20 mA output, the span of the analog signal should not exceed 140 to 150 units (for example –50 to 100°C dew point) to maintain a resolution of 0.1 unit. With analog signal such as 0…5V or 0…20 mA, a maximum span of 180 units could be used.

The above examples are based on a resolution of 0.05 units as this prevents the analog output signal from bouncing around by ± 0.1 units.

For the temperature analog output signal, the HygroFlex 3 uses a 16-bit D/A converter. This is more than sufficient to offer 0.1 resolution for any temperature range and any type of analog signal available with the HygroFlex 3.

Note: an optional 16-bit D/A converter is available for analog output 1. In that case the computed parameter is assigned to output 1 and relative humidity to output 3.

Appendix 3: Maintenance of the ROTRONIC probes

Cleaning or Replacing the Dust Filter of the Probe

Most ROTRONIC probes come with one of the following types of dust filter: (a) protective metal base with a removable filter cartridge or (b) plastic slotted cap with built-in (not removable) filter element.

Depending on the conditions of measurement, the filter should be checked from time to time. If the probe has a removable filter cartridge, this can be easily removed for cleaning.

If the probe has a plastic slotted cap with a built-in filter element, cleaning should be done without removing the filter from the probe. In that case, do not use detergents, solvents or other strong chemicals. Either brush the filter or use a little bit of clean water.

Corroded, discolored or clogged filters should be replaced. If the probe has a removable cartridge, simply replace the cartridge (leave the metal base on the probe).

If the probe has a plastic slotted cap with built-in filter element follow these instructions:

1) Unscrew the filter from the probe and pull it straight away, in the alignment of the probe, so as not the catch the humidity and temperature sensors.
2) Before putting on a new dust filter, check the alignment of both sensors with the probe. The wires that connect the sensors to the probe are very thin and bend easily. If necessary, correct the alignment by tapping the sensor very gently with a smooth object such as a small plastic rod. Do not use sharp pliers or tweezers as this could puncture the sensor and do not pull hard on the sensor.

Periodic Calibration Check of the Probes

Long term stability of the ROTRONIC Hygromer humidity sensor is typically better than 1 %RH per year. For maximum accuracy, calibration of the probe should be verified every 6 to 12 months. Applications where the probe is exposed to significant pollution may require more frequent verifications.

Both the Pt 100 RTD temperature sensor and associated electronics are very stable and should not require any calibration after the initial factory adjustment.
For routine calibration checks, the probe should be verified at one or two values of humidity.
For more details, see **appendix 4** - **Calibration Basics** and **Functions – ADJUST M.PT**.

Appendix 4: Calibration Basics

Depending on whether or not the transmitter has a display and keypad, the following choices are available to calibrate the probe(s) used with the HygroFlex:

a) Calibration using the transmitter display and keypad (see Functions)
b) Calibration using a HygroPalm indicator (see Remote Control with the HygroPalm indicator)
c) Calibration using a PC with the optional HW3 software (see separate instructions for the HW3 software) – This choice is available only with the HygroFlex 2 and HygroFlex 3.
d) Calibration of the probe alone (removed from the transmitter), using a PC with the optional HW3 software and the **T7-03-WIN** calibration cable (see separate instructions for the HW3 software).

Note: the HygroFlex itself should not require any field calibration.

Temperature Calibration

Note: the stability of the Pt100 RTD sensor used to measure temperature is such that temperature calibration in the field is seldom required.

In order to be able to correctly evaluate the accuracy of the temperature measurements provided by the probe, you should be able to meet the following requirements:

a) Both the probe and a reference thermometer should be ventilated with the same stream of air. Any dust filter used to protect the sensors should be carefully removed from the probe. If the probe has a protective slotted cap, this may be left on the probe.

b) Air velocity at the sensor should be within the limits of 200 to 500 feet/minute (1 to 2.5 meters/second). Any comparison between two instruments at a velocity under 200 feet/minute may not be valid. Air velocity above 500 feet/minute may damage the unprotected humidity sensor.

c) The temperature of the air stream should be practically constant.

If you cannot meet the above requirements, you should not attempt to calibrate temperature.

Humidity Calibration

ROTRONIC provides easy-to-use, certified humidity standards for those customer who do not have access to a humidity generator. To use these standards, you will need a calibration device that is suitable for your probe.

Calibration Device

The calibration device is a small airtight container that fits on the probe and seals around the humidity sensor. During calibration, a known reference humidity is produced inside the calibration device by means of a humidity standard (usually an aqueous salt solution).

The following calibration devices are available from ROTRONIC:

ER-15: for 15mm diameter probes
ER-05: for 5 mm diameter probes
EM-G for probe type IE
ERV-15 for probe type IW

Certified Humidity Standards

The ROTRONIC certified standards are available in boxes of 5 glass ampoules of the same value, which can be stored indefinitely. Standards in the range of 5 to 95 %RH are non-saturated aqueous salt solutions that are precisely titrated at our factory for the right concentration. The 0 %RH humidity standard is made of small granules of a highly porous ceramic that have been dried at a high temperature. A Material Safety Data Sheet is available for each standard. Since most standards are a salt solution, parts which have come in contact with the liquid should be cleaned after each use.

Each box of standards comes with a certificate that provides statistical information on the manufacturing batch of the standard. Information on the effect of temperature on each standard is provided on the cover of each box of standard. When calibrating either with the HygroFlex or with the HW3 software, the effect of temperature on the standards is compensated by the software and no further correction is required. The value of the standards is not affected by altitude.

Instructions for using the Standards

- Install the calibration device on the probe so that the receptacle (or solution holder) is under the probe. Check for a tight fit and remove the receptacle from the calibration device.
- Place one fiber disc (each box of standards includes 5 discs) in the receptacle of the calibration device. The purpose of this disc is to prevent accidental spilling of the solution inside the calibration device or on the humidity sensor.
- Tap the top of the ampoule so that all liquid drops to the bottom of the ampoule. Snap off top and empty contents on fiber disc. Since the ampoule is made of glass, exercise proper caution (gloves, safety glasses) when snapping off the top.
- Put the receptacle back on the calibration device and make sure that the solution does not come in contact with the sensor: The solution inside the calibration device should never be on top of the sensors.
- Allow at least 60 minutes to insure that the calibration device, the solution and the sensor are in a state of equilibrium. This is verified by monitoring the display.
- After adjusting the probe, remove the receptacle from the calibration device. Throw away the wet disc (non reusable). Thoroughly wash and wipe dry the receptacle.

General Recommendations

During calibration, temperature stability is the single most important requirement. If possible, calibrate the probe is room temperature (18 to 25°C). Room temperature should be stable to ± 0.25°C or better during the period of time required for each calibration point. Do not calibrate close to an air vent or a heater, in direct exposure to sun rays, etc.

If using a humidity generator to calibrate the probe, make sure that the probe is as fully immersed in the generator as possible to minimize temperature effects.

Appendix 5: Humidity Definitions

Relative Humidity

Relative humidity is the ratio of two pressures: %RH = 100 x p/ps where p is the actual partial pressure of the water vapor present in the ambient and ps the saturation pressure of water at the temperature of the ambient.

Relative humidity sensors are usually calibrated at normal room temperature (above freezing). Consequently, it generally accepted that this type of sensor indicates relative humidity with respect to water at all temperatures (including below freezing).

Ice produces a lower vapor pressure than liquid water. Therefore, when ice is present, saturation occurs at a relative humidity of less than 100 %. For instance, a humidity reading of 75 %RH at a temperature of -30°C, corresponds to saturation above ice.

Dew Point / Frost Point Temperature

The dew point temperature of moist air at the temperature T, pressure P_b and mixing ratio r is the temperature to which air must be cooled in order to be saturated with respect to water (liquid).

The frost point temperature of moist air at temperature T, pressure P_b and mixing ratio r is the temperature to which air must be cooled in order to be saturated with respect to ice.

Wet Bulb Temperature

The wet bulb temperature of moist air at pressure P_b, temperature T and mixing ratio r is the temperature which the air assumes when water is introduced gradually by infinitesimal amounts at the current temperature and evaporated into the air by an adiabatic process at constant pressure until saturation is reached.

Vapor Concentration

The vapor concentration (density of water vapor in a mixture) or absolute humidity, is defined as the ratio of the mass of water vapor M_v to the volume V occupied by the mixture.

$D_v = M_v / V$, expressed in grams/m^3 or in grains/cu ft

This can be derived as follows from the equation PV = nRT:

a) $Mv = n \times m_w$, where :

n = number of moles of water vapor present in the volume V
m_w = molecular mass of water

b) $D_v = M_v /.V = n \times m_w / V = m_w \times p / RT$, where:

m_w = 18.016 gram
p = partial pressure of water vapor [Pa]
R = 8.31436 Pa x m3 / °K x mole
T = temperature of the gas mixture in °K

D_v [g / m^3] = p / 0.4615 x T

1 gr (grain) = 0.0648 g (gram)
1 cu ft = 0.0283168 m^3

D_v [gr / cu ft] = 0.437 x D_v [g / m^3]

Specific Humidity

The specific humidity (also known as mass concentration or moisture content of moist air) is the ratio of the mass M_v of water vapor to the mass ($M_v + M_a$) of moist air in which the mass of water vapor M_v is contained.

$Q = M_v / (M_v + M_a)$

$Q = p\ m_w / (p\ m_w + (P_b - p)\ m_a)$

Q [g / kg] = $1000\ p / (1.6078\ P_b - 0.6078\ p)$

1 gr (grain) = 0.0648 g (gram)
1 lb = 0.4535923 kg

Q [gr / lb] = 7 x Q [g / kg]

Mixing Ratio by Weight

The mixing ratio r of moist air is the ratio of the mass M_v of water vapor to the mass M_a of dry air with which the water vapor is associated:

$r = M_v / M_a$

$M_v = n \times m_w = m_w \times p\ V / RT$

$M_a = n \times m_a = m_a \times p_a\ V / RT = m_a \times (P_b - p) / RT$, where:

m_w = 18.016 gram
m_a = 28.966 gram
p = partial pressure of water vapor [Pa]
p_a = partial pressure of dry air [Pa]
P_b = total or barometric pressure [Pa]
R = 8.31436 Pa x m3 / °K x mole
T = temperature of the gas mixture in °K

$r = m_w\ p / m_a\ (P_b - p)$

$r = 621.97 \times p / (P_b - p)$ [g / kg]

1 gr (grain) = 0.0648 g (gram)
1 lb = 0.4535923 kg

r [gr / lb] = 7 x r [g / kg]

Enthalpy

The enthalpy (or energy content) of moist air at pressure P_b, temperature t (°C) and mixing ratio r (g/kg) is defined by:

h [kJ / kg moist] = 1.00464 t + 0.001846 r x t + 2.5 r

Note: by convention, the enthalpy of dry air (r = 0) at 0°C is equal to zero. Negative values of enthalpy are possible and indicate that the energy content of the air / vapor mixture is less than the energy content of dry air at 0°C

1 lb = 0.4536 kg
1 BTU = 1.05507 kJ

h [BTU / lb] = 0.4299 x h [kJ / kg] + 7.68

The value 7.68 is added to reference enthalpy in BTU / lb to the temperature of 0°F.

Appendix 6: Dew Point Accuracy

Both the HygroFlex 2 and the HygroFlex 3 use the relative humidity and temperature measurements to compute another parameter such as dew point, mixing ratio, enthalpy, etc. The accuracy of this conversion varies, depending on the humidity and temperature conditions. Typical accuracy for the dew point conversion is provided in the graph below:

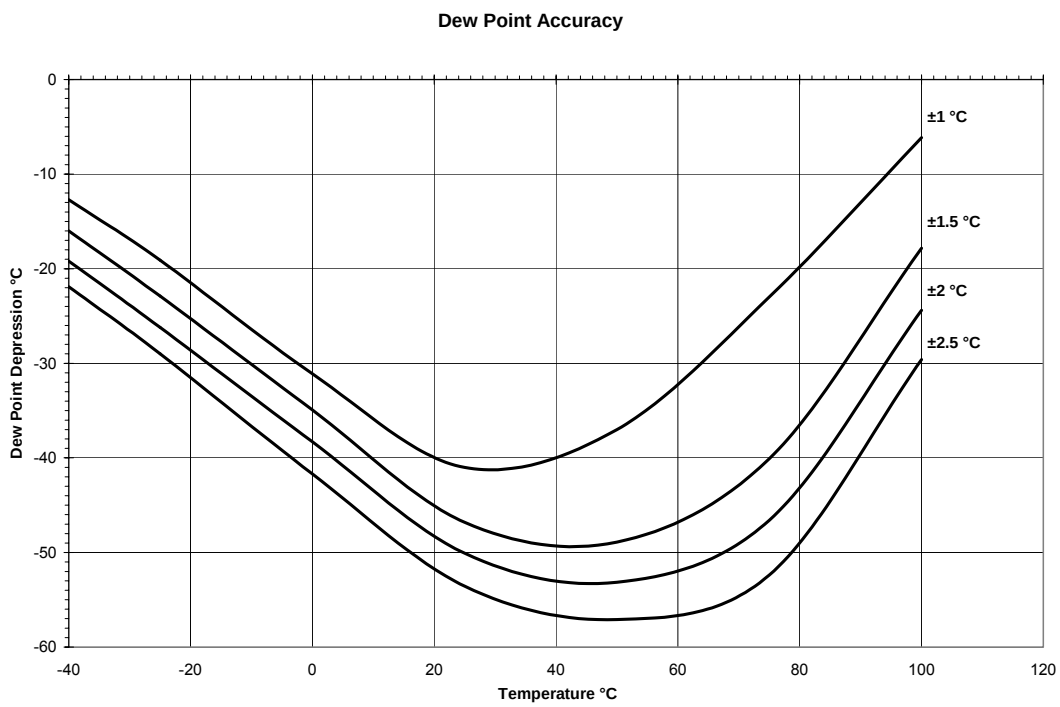

The accuracy of the dew point conversion is less than the accuracy that is normally achieved with a chilled mirror instrument. This is especially true at low dew point values (dew point depression of more than -40…-50°C) and at low temperatures. In many applications, repeatability is more critical than accuracy. Repeatability of the dew point conversion is typically 1/3 of the accuracy shown above.

Using a dew point conversion permits to measure conditions that cannot be measured with a chilled mirror instrument. Typically, the measuring head of a chilled mirror instrument is limited to a maximum of 70°C and, therefore, cannot measure a dew point temperature above 70°C. In addition to the ability to operate at high temperature, the relative humidity probe offers significant advantages for industrial applications: less maintenance and higher tolerance to contaminants, no sampling system, no uncertainty between dew and frost and better response to fast changing conditions.

Appendix 7: RS232 Communication Protocol

The following describes the RS232 communication protocol that is used by the instruments from ROTRONIC when connected to the COM port of a PC. This information is provided for those customers who for some reason cannot use the HW3 software.

Connections

The exchange of data requires 3 wires: TXD (transmit), RXD (receive) and SG (signal ground).

RS232 Settings

Communication is done at the rate of 19200 bps. When there is a large amount of data to be exchanged (file read), the baud rate can be increased to 38400 bps.

In principle, only 7-bit ASCII characters (ASCII 32 to 127) are being used. The exception is File Read, where 8-bit characters are being used.

Normal settings:

Baud rate	: 19200
Parity	: even
Data bits	: 7
Stop bits	: 1
Flow Control	: none

Force incoming data to 7-bit ASCII.

Data Integrity

- 7-bit characters are sent with a parity bit. 8-bit characters are sent without parity bit.
- Strings (made of 7-bit characters) can be sent with or without checksum at the end of the string. When the checksum is not known – for example: when sending a command - the checksum is replaced by the } character at the end of the string.
- For the transmission of files (8-bit characters), we plan on using predefined initialization and end-of-communication sets of characters with a checksum.

Communication

Any communications program such as Windows Hyperterminal can be used to read the data on a PC screen. Communication with the instrument is always initiated from the PC. Any string sent from the PC should begin with the { character to start the synchronization. This should be followed by a 1-character product identification (see table below). The address is next (this is a 2-digit number between 00 and 31 used to distinguish between the different instruments, probes, functions etc. that are connected to the PC). The address is followed by a command and by any values or parameters that may be required to carry out the command. Use a carriage return (CR) to terminate the command string.

Example: {M00RDD} + CR (asks instrument M00 to send measurement data)

When several instruments are connected together (RS485 network), commands directed to instruments other than the instrument that is physically connected to the COM port of the PC should be preceded with the | character (ASCII 124)

Example: |{M01RDD} + CR

The instrument answers with a string beginning with the { character, the product identification and the address, followed by the command that was received and any data field that may have been requested by the command. This is followed by a checksum. The length of the string may vary, depending on how much data is included. Since the string itself does not include any information about its own length, a carriage return (CR) is always used to terminate the string.

Example: {M01RDD 0027.50;0067.17;0029.31;0064.27;#M (terminated with CR)

where:

{M01RDD	: repeats the command + blank space
0027.50	: %RH – probe 1
;	: separator
0067.17	: °F – probe 1 (temperature unit depends on instrument configuration with HW3)
;	: separator
0029.31	: %RH – probe 2 (optional)
;	: separator
0064.27	: °F – probe 2 (optional)
;	: separator
#M	: check sum

Note: Some instruments may insert the $ character at the second or third position of the string.

1-character Product Identification

ID	Product	Examples (the instrument will answer the following command)
a	A1H	{a00M} + CR
d	I3000, I3000S	{d00zY + CR – assuming the address is 0
d	BT-RS	{d02z] + CR
w	HygroWin	Not Applicable
x	MOK-Win	{x00M} + CR
0	HygroPalm 1	Not Applicable
u	HygroPalm 2	{u00RDD}+CR – assuming the address is 0
U	HygroPalm 3	{U00RDD}+CR – assuming the address is 0
1	HygroFlex 1	Not Applicable

m	HygroFlex 2	{m00RDD}+CR – assuming the address is 0
M	HygroFlex 3	{M00RDD}+CR – assuming the address is 0
2	HygroLab 1	Not Applicable
b	HygroLab 2	{b00RDD}+CR – assuming the address is 0
B	HygroLab 3	{B00RDD}+CR – assuming the address is 0
X	Reserved	{X00RDD}+CR – assuming the address is 0

CR=Chr(13)

Special Situations (single instrument)

Using address 99 in a data request causes instruments with any address to answer. For this reason, address 99 should not be used when several instruments are connected to a network. Address 99 can be useful when trying to communicate with a single instrument of unknown address. The address is returned as part of the answer string.

When the product ID is unknown, it can be replaced with a blank in the command. The product ID is returned as part of the answer string.

Example: { 99RDD}+CR

Examples

Data can be read from the instrument directly connected to the COM port of the PC (RS232) as well as from any instrument that is networked (RS485). The following examples are for the HygroFlex. The same commands can be used for other instruments with similar capabilities by substituting the appropriate values for the product ID and address.

1) read %RH and temperature from the HygroFlex 2 (with 2 probes) address 01, directly connected to the PC COM port (RS232):

data request: {m01RDD}+CR

answer: {m01RDD 0025.01;0016.89;0024.57;0019.84;#C

note: 0025.01: humidity probe 1 (%RH)
0016.89: temperature probe 1 (°C as per instrument configuration)
0024.57: humidity probe 2 (%RH), etc.

2) read %RH, temperature and computed parameter

data request: {m01RDD0;}+CR

answer: {m01RDD 0025.90;0015.82;-003.69;0024.47;0019.88;-001.00;S

note: 0025.90: humidity probe 1 (%RH)
0015.82: temperature probe 1 (°C as per instrument configuration)
-003.69: dew point probe 1 (°C as per instrument configuration), etc.

3) read %RH and temperature from the HygroFlex 3 (1 probe) with address 00, connected by RS485 to the HygroFlex 2:

data request |{M00RDD} +CR note the | character (ASCII 124) preceding the command

answer: {M00RDD 0020.41;0019.87;----.--;----.--;#E

note: 0020.41: humidity probe 1 (%RH)
0019.87: temperature probe 1 (°C as per instrument configuration), etc..

Appendix 8: Metal Enclosure Option

As an option, the HygroFlex is available in an aluminum enclosure with a hinged cover - with or without display and keypad. The electrical connections are arranged like on the standard models. The enclosure can be attached to a wall using the flanges located on each side of the enclosure.

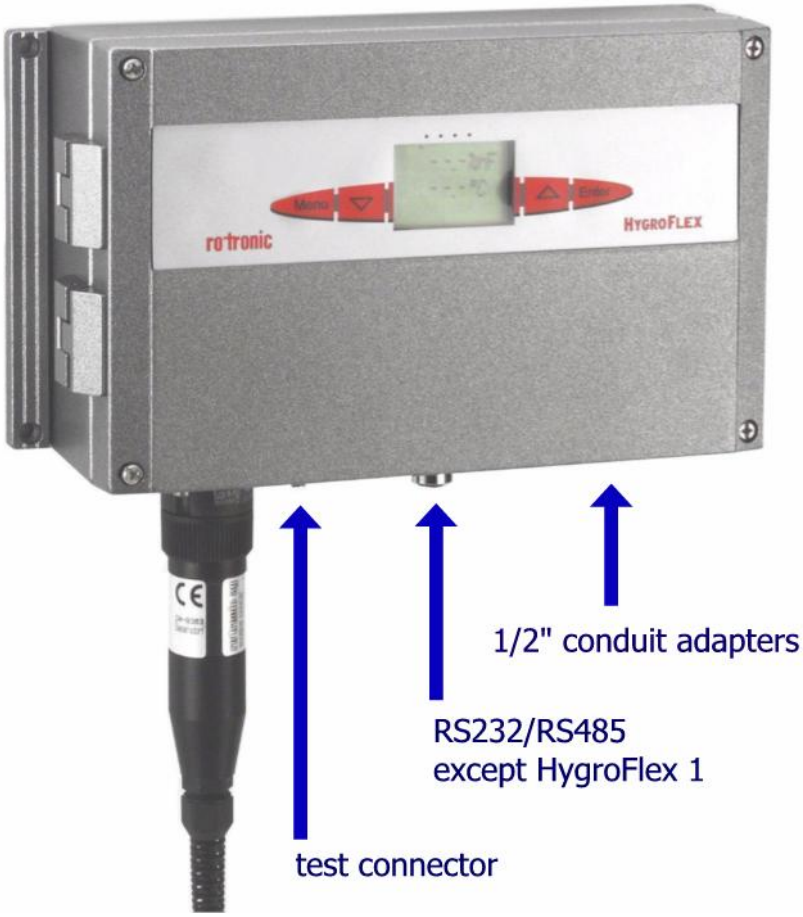

Appendix 9: Accessories for the HygroFlex

Order Code	Description
HW3	HW3 software (CD ROM)
HygroPalm 1	HygroPalm 1 indicator, limited to displaying the readings from the HygroFlex
HygroPalm 3	HygroPalm 3, field calibrator
AC1620	Cable HygroPalm 3 to HygroFlex
AC1621	Cable HygroPalm 1 to HygroFlex
AC1623	Cable service connector (MTA) to PC
AC1616	Probe extension cable with signal amplifier, 2 to 200 meter (6 to 656 ft)
T7-03-B5	Adapter cable for optional 2nd probe. Cable length 3 meter (9.8 ft), 5 meter (16.4 ft) on request
T7-03-WIN	Calibration cable HygroClip probe with T7 connector to PC. Terminated with a 25-pin SUB D connector. Converter 25-pin to 9-pin is supplied. Cable length 3 meter (9.8 ft). Includes 115 VAC / 9VDC adapter to power probe and cable electronics.
AC1618/35	probe simulator 35%RH / 77°F(25°C)
AC1618/50	probe simulator 50%RH / 77°F(25°C)
AC1618/80	probe simulator 80%RH / 77°F(25°C)
EA00-SCS	0%RH humidity std, SCS cert., pack of 5
EA05-SCS	5%RH humidity std, SCS cert., pack of 5
EA10-SCS	10%RH humidity std, SCS cert., pack of 5
EA20-SCS	20%RH humidity std, SCS cert., pack of 5
EA35-SCS	35%RH humidity std, SCS cert., pack of 5
EA50-SCS	50%RH humidity std, SCS cert., pack of 5
EA65-SCS	65%RH humidity std, SCS cert., pack of 5
EA80-SCS	80%RH humidity std, SCS cert., pack of 5
EA95-SCS	95%RH humidity std, SCS cert., pack of 5
ERV-15	calibration device for type ‘IW’ probes
ER-15	calibration device for 15mm diameter probes
ER-05	calibration device for 5mm diameter probes
EM-G	calibration device for type ‘IE’ probes

Appendix 10: Electrical Installation Guidelines

Power supply wiring

Heavy machinery and instrumentation should not share the same power supply wiring. If this cannot be avoided, noise filters and surge protectors should be used. Most UPS devices have those features already integrated.

General guidelines for signal cables

The following guidelines are derived from European Standard EN 50170 for the transmission of signals by copper wires. When planning an installation, the rules provided by EN 50170 should be followed under consideration of local circumstances to determine the position of machines and equipment.

All ROTRONIC HygroClip products are tested for Electromagnetic Compatibility according to following European standards:

- EN 61000-6-3 + EN 61000-6-1 (residential)
- EN 61000-6-4 + EN 61000-6-2 (industrial)

Whenever the level of electromagnetic interference is expected to be high, both the instruments and signal cables should be placed as far away as possible from the source of interference.

In general, signal cables should be installed in bundles or channels / conduits, separate from other cables as indicated in the table below:

• Bus signals such as RS485 • Data signals for PC´s, printers etc. • shielded analogue inputs • unshielded direct current (<= 60V) • shielded process signals (<= 25 V) • unshielded alternate current (<= 25V) • coaxial cables for CRT monitors	**in common bundles or channels / conduits**
• direct current from 60 V to 400 V (unshielded) • alternate current from 25V to 400 V (unshielded)	**in separated bundles or channels / conduits, without minimum distance**
• direct and alternate current > 400 V (unshielded) • Telephone lines • **lines leading into EX-rated areas**	**in separated bundles or channels / conduits, without minimum distance**

Lightning protection

Cabling in areas with a risk of lightning requires a lightning protection. For cabling underground in between buildings, we recommend the use of special fibre optic cables. If this is not possible, use copper cables that are suitable for underground installation.

Additional guidelines for RS-485 wiring (products with a serial interface)

RS-485 Cable

Using a symmetrical transmission method in combination with low capacity/ low attenuation twisted pair cables, allows extremely reliable long distance connections. The use of a high grade shielded cable avoids cross talk between the transmitted signals and also reduces the potential of external interference. For the RS-485 cable, we recommend using a cable Cat. 5e ANSI/ TIA /EIA-568-A-5.

In general the RS-485 cable should be shielded and comply with the following specifications:

- Cable capacitance <=300pF/m or 90 pF/ft
- Line impedance 100 Ω ±15 Ω
- Line resistance 140 Ω/km or 225 Ω
- Signal lines Twisted pair

In addition, we recommend terminating each end of the RS-485 cable with a 240 Ohm resistor.

RS485 Network

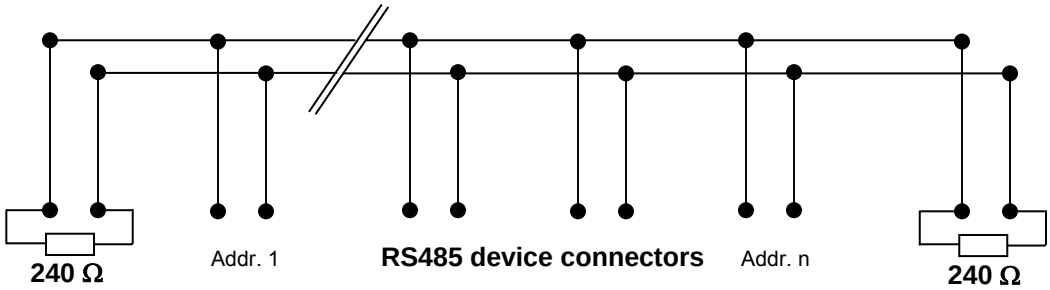

Voltage potential issues

The existence of a voltage-potential between instruments that are interconnected can be a source on concern in large installations, installations with different mains power supply and in inter-building networking.

As a first measure, the shield of a signal cable should be connected at both ends. In the case of a data cable, a low-resistance potential equalization cable may also have to be used. This cable should be run parallel and as near as possible to the data cable, preferably in the same conduit. The shield of the data cable should under no circumstances be used as equalization cable! The conductors of the potential equalization cable should ideally be stranded in order to be effective also in case of high- frequency interference.

The following point should also be observed:

- Close the parasitic circuit
- Connect all devices to the potential equalizing cable as often as possible. Electrical conductors such as machine elements, metal tubes or supporting constructions should be integrated into the system.
- Protect the potential-equalization cable and connections against corrosion.
- Select the cross-section of the potential equalization cable according to the maximum equalization current.

If these different measures do not correct the problem, a galvanic separation according to ISO9549 may have to be installed. You may also want to consider the use of fibre-optic cables.