HygroLab

Bench Top Humidity Temperature Indicator

Instruction Manual

v1.5

Contents

Note: functions such as instrument configuration with a PC as well as the calibration of HygroClip probes with a PC require the optional HW3 software. Instructions for using the HW3 software are not included in this manual. These instructions are shipped separately on the same CD ROM as the HW3 software.

Overview

The HygroLab is a bench-top laboratory humidity temperature indicator that can be used with a wide variety of probes to meet specific application requirements. The HygroLab operates with an external 9V AC adapter.

The HygroLab is available in 2 different models:

HygroLab 1: basic indicator

- accepts up to 2 probes: ROTRONIC HygroClip digital probes or analog probes[1)]
- simultaneous display of relative humidity and temperature (one probe at a time)
- software-based probe calibration (1-point or multi-point) [2)]

1) ROTRONIC analog probes only – restrictions apply
2) applies only to the ROTRONIC HygroClip digital probes

HygroLab 2: standard indicator

- accepts up to 4 probes: ROTRONIC HygroClip digital probes or analog probes[1)]
- relative humidity, temperature, dew point, wet bulb, mixing ratio, enthalpy, etc [2)]
- software-based probe calibration (1-point or multi-point) [3)]
- possibility of using one of the four probes as a reference to do a 1-point adjustment of the other probes [3)]
- RS232 and RS485 digital ports [4)]
- optional analog outputs (repeat analog probe input signals)

1) third-party pressure probe or ROTRONIC analog probe – restrictions apply
2) uses either a fixed barometric pressure value or the measurements from an analog pressure probe for those parameters that require pressure as a computational input. The fixed pressure value can be changed with the optional HW3 software.
3) applies only to the ROTRONIC HygroClip digital probes
4) the computed parameter (dew point or other) is not sent to these ports. Use of the HW3 software on a PC allows real time computation of the dew point (or other) and facilitates both networking and instrument configuration

HygroLab 1

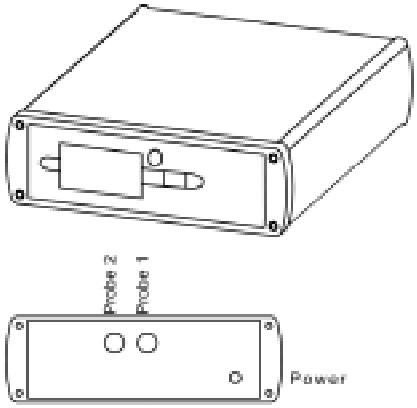

HygroLab 2

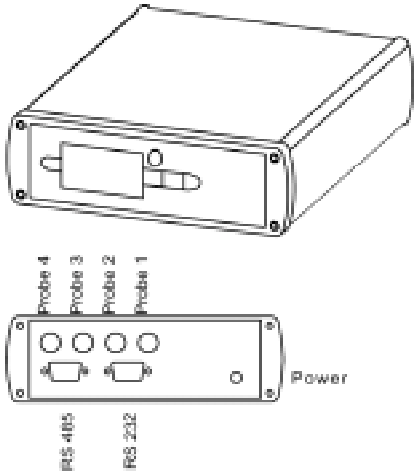

General Description

Power Requirements

The HygroLab operates with an external AC adapter providing 9 to15 VDC ,100 mA. The power receptacle is a 3.5 mm Jack female with DC+ center.

Probes and Probe Inputs

Model	HygroLab 1	HygroLab 2
Number of probe inputs	2	4
Probe types [1)]	ROTRONIC Digital ROTRONIC Analog	ROTRONIC Digital ROTRONIC Analog Third Party Analog
Number of digital input channels	2	4
Number of analog input channels	4	8
Analog input A/D resolution	10-bit	10-bit

1) Unless otherwise specified when ordering, all probe inputs are factory programmed to accept a HygroClip digital probe. Prior to using any analog probe, the corresponding probe input should be re-programmed. With the HygroLab 2, this can be done with the HW3 software after connecting the RS232 port of the HygroLab to a PC (see separate HW3 manual).

HygroClip Digital Probes

The HygroLab is primarily designed for use with the ROTRONIC HygroClip digital humidity temperature probes. These probes permit to take full advantage of all the features and functions of the HygroLab.

The ROTRONIC HygroClip digital probes are highly accurate and are calibrated entirely by means of software (no adjustment potentiometers). Because calibration and other data are stored in the probe non-volatile memory, the probes are fully interchangeable. When a probe requires calibration or has to be repaired, it can be replaced with another probe in a few seconds.

The ROTRONIC HygroClip digital probes are available in different configurations so as to meet the requirements of each application:

HygroClip S
measurement in air
max. 85°C (185°F)

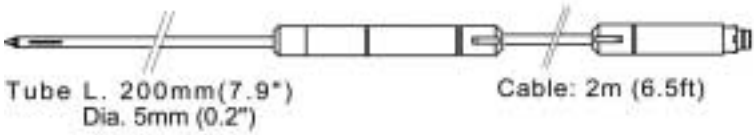

HygroClip SP05
measurement in air ducts
max. 85°C (185°F)

HygroClip SC05
measurement in tight spaces
max. 100°C (212°F)

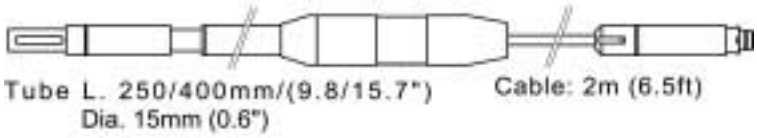

HygroClip HK25 / HK40 air probe
measurement at high temperature
HK25: max. 100°C (212°F)
HK40: max. 200°C (392°F)
wire mesh filter

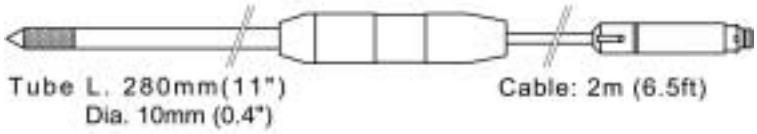

HygroClip HP28 insertion probe
measurement of materials in bulk
max. 85°C (185°F)

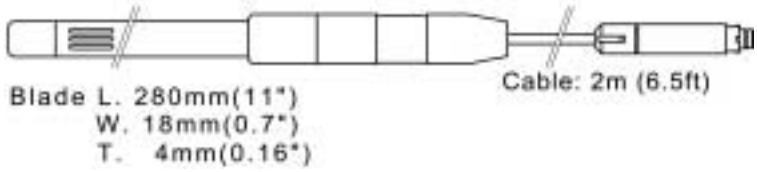

HygroClip HS28 sword probe
measurement of paper stacks/rolls
max. 85°C (185°F)

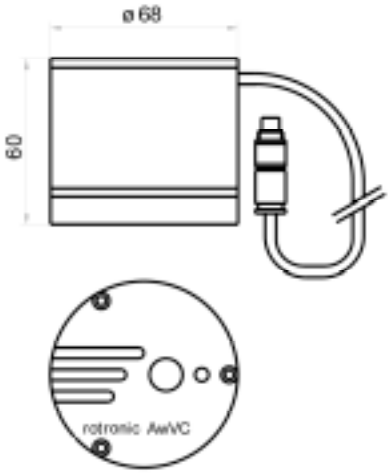

AwVC-DIO water activity probe

Analog Probes

The HygroLab can be used with one or more analog probes. The corresponding probe input(s) as well as the scale and unit of the analog input signal(s) should be programmed with the HW3 software prior to using the probe(s). For example, an analog pressure probe may used to provide the local value of barometric pressure for the computation of parameters such as the wet bulb temperature, mixing ratio or enthalpy.

Use of analog probes is subject to the following restrictions and limitations:

a. ROTRONIC analog humidity-temperature probes with the standard temperature output signal of – 0.5…2.0 V = -50…200°C: because the HygroLab cannot read a negative voltage signal, temperature measurement is generally limited to values above freezing.

b. Third-party analog probes: single channel probes (one signal), output signal within the range of 0 to 2.5 VDC, supply voltage: 9 VDC or less, maximum current consumption: 10 mA.

c. Resolution is limited by the 10-bit A/D converter used for the analog inputs. This converter provides a theoretical maximum of 1024 counts for an input voltage span of 2.5 VDC. In theory, this gives a resolution of 2.5 / 1024 = 0.00244 V. In practice, it is not possible to get 100% of the counts from an A/D converter and the actual resolution should be about 0.0027 V (typical). For example, if a probe with a temperature signal of 0..1 V = 0…100°C is being used, the signal resolution will be about 100 x 1 x 0.0027 = 0.27°C.

Analog Outputs (optional)

Analog outputs are optional on HygroLab 2. These outputs simply repeat the analog inputs (if any analog probe is being used). See Connectors – Analog Outputs for details.

RS232 Digital Port (HygroLab 2)

The RS232 port can be connected to the COM port of a PC. In principle, any communication software can be used to interrogate and read the HygroLab with the commands described in appendix 6 (RS232 communication protocol). It is important to note that the computed parameter (dew point or other) is not part of the digital communication. Use of the HW3 software (optional) allows real time computation of the dew point (or other) by the PC while providing additional functionality such as:

- RS485 networking (up to 32 units)
- full access to instrument configuration (unit system, etc.)
- calibration of the ROTRONIC HygroClip digital probes independently of the HygroLab (requires the MOK-02-WIN calibration cable to connect the probe to a PC)
- data logging to a PC disk file
- graphic functions (both on and off-line)

For more details see separate instruction manual provided with the HW3 software.

RS485 Networking (HygroLab 2)

The optional HW3 software offers a simple means of quickly establishing a PC based network.

Up to 32 HygroLab indicators and/or HygroFlex transmitters can be connected together on a network. Any instrument and can be used either as a slave or a master, without special configuration. Each unit must be given a unique network address with the HW3 software (0 to 31). The master is automatically the unit that is connected to the COM port of the PC by means of the RS232 port. See Connectors – RS232 / RS485 for details.

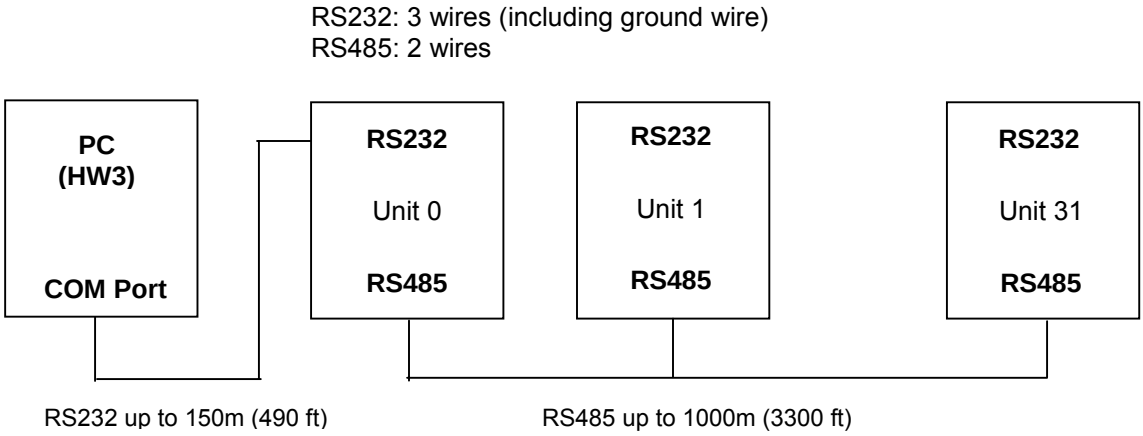

Unit System

The unit system of the HygroLab (Metric or English) is factory programmed as specified when the instrument was ordered. The unit system can easily be changed by the user after connecting the internal service connector (HygroLab 1) or the RS232 port (HygroLab 2) to the COM port a PC with the optional HW3 software installed (instrument configuration).

Note: the HygroLab can be configured to display water activity instead of relative humidity:

1.000 Aw = 100.0 %RH

Display

The LC display shows which probe input is being displayed (small indicator on top of the display) and up to 2 parameters measured by the probe, with the associated engineering unit. When relevant, the message line provides additional information.

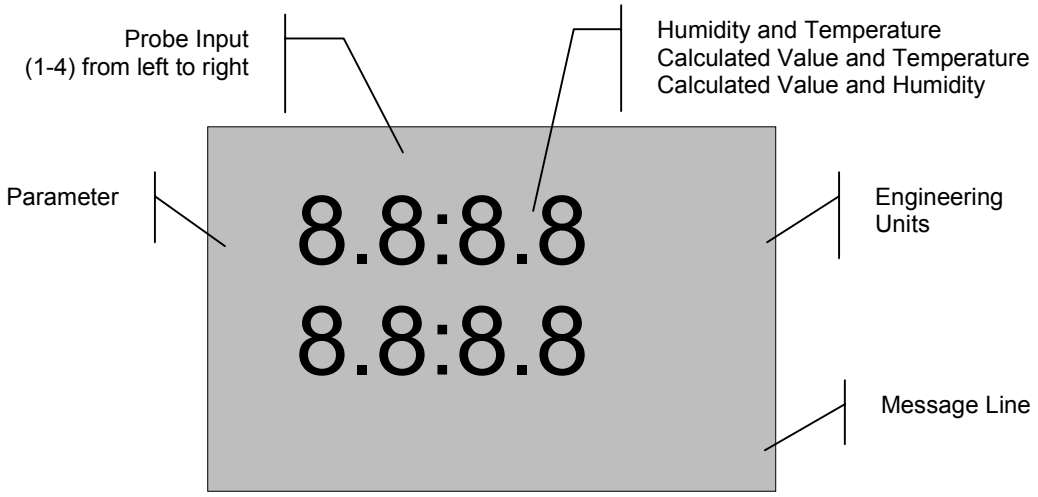

Keypad

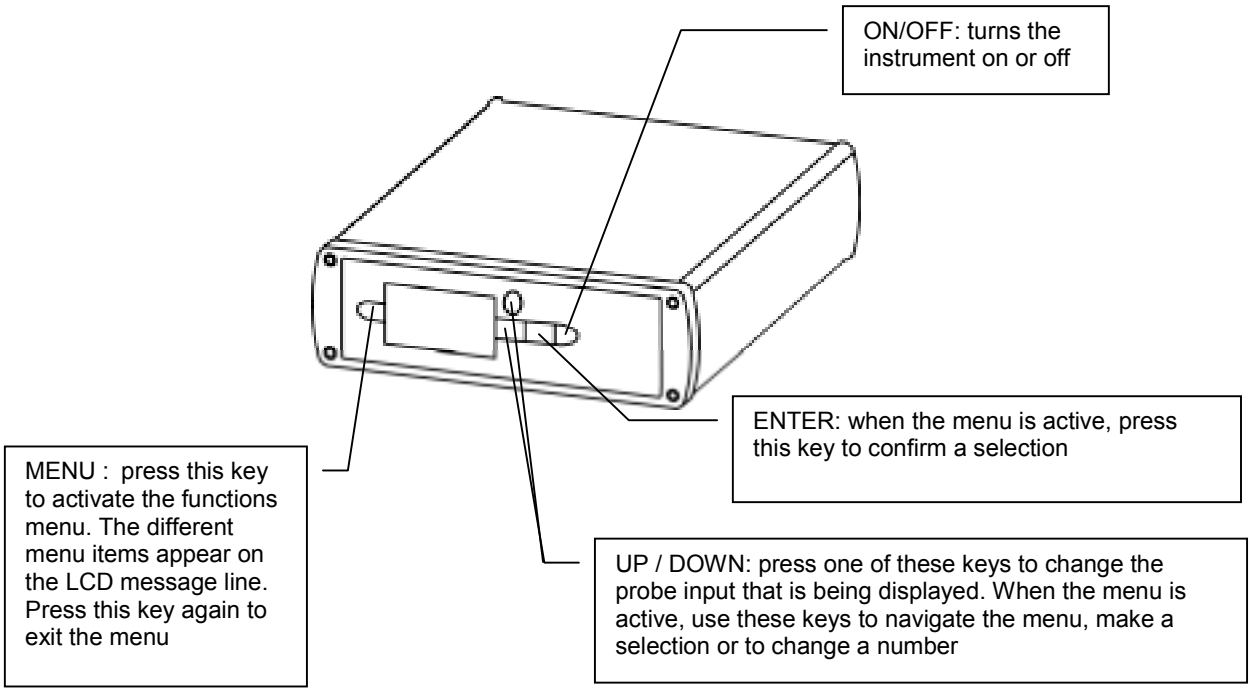

Operation

Connect the AC adapter to the Power connector of the HygroLab and connect a probe [1)]. Press on the ON/OFF key. After a brief test and introductory message, the measurements appear on the LC display. Measurements are updated to the display at the rate of 0.75 sec. x number of digital probes (HygroClip) connected to the HygroLab.

1) Unless otherwise specified when ordering, all probe inputs are factory programmed to accept a HygroClip digital probe. Prior to using any analog probe, the corresponding probe input should be re-programmed. This can be done with the HW3 software after connecting the RS232 port of the HygroLab to a PC (see separate HW3 manual).

HygroLab 1

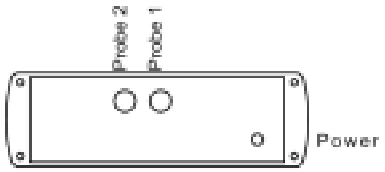

HygroLab 2

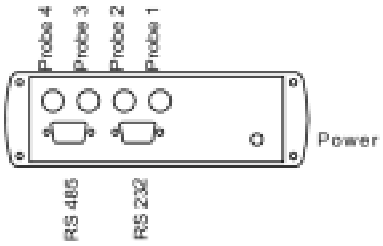

Probe Input Selection

The display can be switched between probes with the UP or the DOWN key. The selection is confirmed on the message line of LC display as well as by an indicator located at the top of the display.

Functions

To access the function menu, press the MENU key. The first menu item appears on the message line of the LC display. Use the UP or the DOWN key to navigate the menu. When the desired menu item appears on the message line of the LC display, press the ENTER key to select. Some menu items have sub-items. These can be selected with the UP, DOWN and ENTER keys. To exit the menu and return to the normal display mode, press the MENU key. The instrument also returns automatically to the normal display mode when no key is being pressed for some time (main menu: 10 sec., submenu: 30 sec.).

CALCULATE (HygroLab 2)

Definition

This function is used to select or view the humidity parameter that is calculated by the instrument. The calculated parameter is selected individually for each probe connected to the instrument [1]. Prior to entering this function, select on the display the probe to programmed.

1) does not apply to third-party analog probes.

The unit system (**M**etric or **E**nglish) is factory programmed according to what was specified when the instrument was ordered. The unit system can be changed by the user with the optional HW3 software.

Selections

Parameter	**M**	**E**	**HygroLab 1**	**HygroLab 2**
Dew Point / Frost Point [1]	°C	°F	N/A	**x**
Wet Bulb Temperature	°C	°F	N/A	**x**
Enthalpy	J/g	BTU/lb	N/A	**x**
Vapor Concentration	g/m^3	gr/cuft	N/A	**x**
Specific Humidity	g/kg	gr/lb	N/A	**x**
Mixing Ratio	g/kg	gr/lb	N/A	**x**
Vapor Concentration at Saturation	g/m^3	gr/cuft	N/A	**x**
Partial Pressure of Water Vapor	hPa	PSI In Hg	N/A	**x**
Saturation Pressure of Water Vapor	hPa	PSI In Hg	N/A	**x**
Pressure Constant [2] (Barometric Pressure)	hPa	PSI In Hg	N/A	**x**

1) The standard factory setting is frost point for values below freezing. This setting can be changed to dew point with the optional HW3 software
2) This selection shows the fixed value that is used for computing the parameters that require barometric pressure as an input. The fixed pressure value can be changed with the optional HW3 software. The HygroLab 2 can also be programmed to accept the input from a pressure probe (variable pressure value).

DISPLAY (HygroLab 2)

Definition

This function is used to select which parameters are displayed by the instrument. The display mode is specified globally for all probes connected to the instrument.

Selections

- **Measurement**

  Relative humidity (in %RH or as water activity: Aw) and temperature or the parameter measured by any third party probe connected to the instrument.

- **Calculated + Temperature**

  Calculated parameter (as selected under CALCULATE) and temperature. This selection is not available with third-party probes.

- **Calculated + Humidity**

  Calculated parameter (as selected under CALCULATE) and relative humidity. This selection is not available with third-party probes.

ADJUST M.PT (full calibration against a reference environment)

Definition

The Adjust M.PT function permits the full calibration of any ROTRONIC HygroClip digital probe against a known reference environment. This function is designed to permit calibration at 2 temperature values and at up to 4 relative humidity values.

Selections

The Adjust M.PT function offers the following selections:

RHS: Humidity calibration using the ROTRONIC Humidity Standards [1)]
Humidity: Humidity calibration using any suitable reference environment
Temperature: Temperature calibration using any suitable reference environment

1) For humidity calibration, ROTRONIC offers convenient, certified humidity standards to generate known humidity values (for more details, see Appendix 3 - Humidity Calibration).

Procedure

When more than one probe is connected to the instrument, select the probe to be calibrated prior to entering the function (this is the same as the probe that was last displayed).

Regarding the Adjust M.PT function, it is important to observe the following rules:

a) Always calibrate temperature first (if temperature needs to be calibrated)

b) When calibrating temperature (2 points), always calibrate at the low value first. The instrument is programmed to use the low temperature value to compute the offset and the high temperature value to compute the gain.

   T-low < 70 °C (158°F) : used to compute the calibration offset
   T-high ≥ 70 °C (158 °F) : used to compute the calibration gain

   For best accuracy, we recommend using a T-low value close to 20°C (68°F). Preferably, the difference between T-high and T-low should be at least 50 °C (90 °F)

c) When calibrating relative humidity (2, 3 or 4 points) with the ROTRONIC humidity standards, always follow the sequence 35 %RH, 80 %RH, 10 %RH or 5 %RH, 0 %RH). When using a reference other than the ROTRONIC humidity standards, use reference conditions that are within the following brackets and observe the sequence:

   >25 %RH…≤55 %RH [1)] : used to compute the calibration offset
   >55 %RH [1)] : used to compute the calibration gain
   >1 %RH…≤25 %RH : sensor linearity adjustment
   ≤ 1 %RH : sensor linearity adjustment

   The HygroLab is programmed to automatically recognize these brackets.

   1) For best accuracy, we recommend using values close to 35 %RH and 80 %RH

When the probe is at equilibrium with the reference environment, activate the Adjust M.PT function and make the appropriate selections:

a) **RHS**: press the ENTER key to select this item. The LC display shows the value of the standard (for example 35.0%RH) on the top line and “Humidity RHS” on the message line. Verify that the value agrees with the standard being used. If necessary, change the value of the standard with the UP or the DOWN key. Press the ENTER key when done.

   Note: the software automatically compensates for the effect of temperature on the humidity standard. No additional correction is required.

b) **Humidity or Temperature**: press the ENTER key to select. The LC display shows the value read by the probe at the time the ENTER key was pressed. The word “humidity” or “Temperature” is shown on the message line. Use the UP or the DOWN key to change the humidity or temperature value to match the value of the reference environment. For a faster change, keep the key pressed down. Press the ENTER key when done.

After pressing the ENTER key, the message “sure?” should appear on the LC display. Press ENTER to confirm. Next, the LC display will confirm that the probe adjustment has been successfully completed. At that time, press ENTER to exit or MENU to return to the function Adjust M.PT and do another calibration point.

Carry on in the same manner for each calibration point, following the sequence described above.

Note: you can exit the function at any time (without calibrating the probe) by pressing the MENU key.

ADJUST 1PT (1-point adjustment against a reference environment)

Definition

The Adjust 1PT function permits to do a 1-point adjustment (temperature or humidity) of any ROTRONIC HygroClip digital probe against a known reference environment. This function is limited to a simple offset adjustment that is applied across the entire measuring range.

Warning: a 1-point adjustment is no substitute for a full calibration (2 or more points). Doing a 1-point adjustment can improve accuracy over a narrow range of conditions and may also be detrimental to accuracy at other conditions.

Selections

The Adjust 1PT function offers the following choices:

RHS: Humidity calibration using the ROTRONIC Humidity Standards [1)]
Humidity: Humidity calibration using any suitable reference environment
Temperature: Temperature calibration using any suitable reference environment

1) For humidity calibration, ROTRONIC offers convenient, certified humidity standards that generate known humidity values (for more details, see Appendix 3 - Humidity Calibration).

Procedure

When more than one probe is connected to the instrument, select the probe to be calibrated prior to entering the function (this is the same as the probe that was last displayed).

When the probe is at equilibrium, activate the Adjust 1PT function and make the appropriate selections:

a) **RHS**: press the ENTER key to select this item. The LC display shows the value of the standard (for example 35.0%RH) on the top line and “Humidity RHS” on the message line. Verify that the value agrees with the standard being used. If necessary, change the value of the standard with the UP or the DOWN key. Press the ENTER key when done.

   Note: the software automatically compensates for the effect of temperature on the humidity standard. No additional correction is required.

b) **Humidity or Temperature**: press the ENTER key to select. The LC display shows the value read by the probe at the time the ENTER key was pressed. The word “humidity” or “Temperature” is shown on the message line. Use the UP or the DOWN key to change the humidity or temperature value to the value of the reference environment. For a faster change, keep the key pressed down. Press the ENTER key when done.

After pressing the ENTER key, the message “sure?” should appear on the LC display. Press ENTER to confirm. Next, the LC display will confirm that the probe adjustment has been successfully completed. At that time, press ENTER to exit.

Note: you can exit the function at any time (without calibrating the probe) by pressing the MENU key.

ADJUST REF (1-point adjustment against a reference probe)

Definition

Note: this function is not available with the HygroLab 1

When two or more ROTRONIC HygroClip digital probes are connected to the HygroLab, the Adjust REF function permits to use probe #1 as a reference to do a 1-point adjustment (both humidity and temperature) of the other probes.

Warning: a 1-point adjustment is no substitute for a full calibration (2 or more points). Doing a 1-point adjustment can improve accuracy over a narrow range of conditions and may also be detrimental to accuracy at other conditions.

Procedure

Expose all probes to the same stable environment. Ventilation of the probes is highly recommended. Observe the readings from all probes for complete equilibration with the reference environment .

Press the ENTER key to enter the function. The display asks you to wait for a short time and then shows the temperature and humidity read by the reference probe at the time the ENTER key was pressed. Note that these values are not updated to the display as long as the function is active. The message line of the display shows REF = Probe 1, indicating that probe #1 is the reference. Press the UP or the DOWN key to change the reference probe as required.

Press the ENTER key to accept. After pressing the ENTER key, the message “sure?” should appear on the LC display. Press ENTER to confirm. Next, the LC display will confirm that the probe adjustment has been successfully completed. At that time, press ENTER to exit. Note: you can exit the function at any time (without calibrating the probe) by pressing the MENU key.

PROBE

Definition

This function displays the version number and serial number of any ROTRONIC HygroClip digital probe connected to the instrument.

Procedure

Prior to entering the function, select the probe to be displayed (this is the same as the probe that was last displayed).

When entering the function, the version number of the probe is displayed first. Use the UP or the DOWN key to display the serial number of the probe.

RS STATUS

Definition

This function displays the network address of the instrument (preceded by a letter indicating the type of instrument) as well as the RS232 configuration: baud rate, parity, number of data bits, number of stop bits.

Procedure

When entering the function, the network address is displayed first. Use the UP or the DOWN key to display the RS232 configuration of the instrument.

SYS STATUS

Definition

This function displays the software version of the instrument, the serial number of the instrument, the user defined name associated with the instrument (this is entered with the HW3 software) as well as any coded error message (see table below).

Procedure

When entering the function, the software version number is displayed first. Use the UP or the DOWN key to display the other data.

Errors and Status Messages

The following is a list of coded messages (101, etc.) that the HygroLab may show on the bottom line of the LC display.

Errors:		
101	checksum error	the checksum test did not pass during RS-communication.
102	bad command	an unknown command was received
103	disallowed command	a command was received that is reserved for production and service
104	unknown probe input	reference was made to a non-existing analog or digital probe input
105	argument error	error in the number of the arguments in the command or in the value of one of the arguments
106	HygroClip communication error	the HygroClip probe does not answer or is not connected
107	calibration error	the difference between the probe reading and the calibration point is larger than the maximum allowed by the INI command.
108	calibration error (overflow)	internal probe error (or the difference between the probe reading and the calibration value is too large)
110	unknown reference probe	the reference probe is not connected or the reference probe input does not exist

111	Temperature error	During humidity calibration, temperature should be within the limits of 0 and 80°C (32 and 176°F)
Warnings:		
120	no adjustment	calibration
121	No HygroClip probe is connected	
Status:		
130	the probe was adjusted	calibration

Connectors

Internal Service Connector (HygroLab 1)

Open the instrument housing to access the service connector. This 3-pin connector is located on the printed circuit board as shown below:

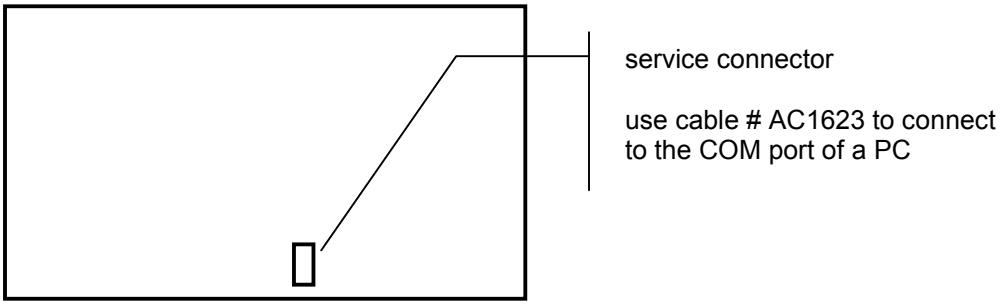

Probe input connectors

Optional Analog Output Connector (HygroLab 2)

If any analog probe is being used, this connector simply repeats the analog probe input signals.

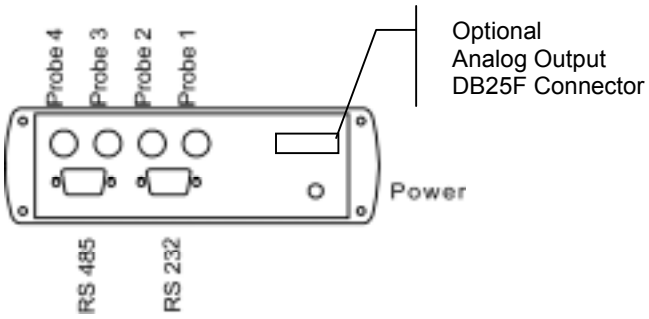

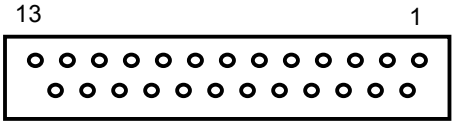

Pin #	Function
1	Probe 1 – Analog 1
2	Probe 1 – Analog 2
3	GND
4	Probe 2 – Analog 1
5	Probe 2 – Analog 2
6	GND
7	Probe 3 – Analog 1
8	Probe 3 – Analog 2
9	GND
10	Probe 4 – Analog 1
11	Probe 4 – Analog 2
12	GND

RS232 / RS485 (HygroLab 2)

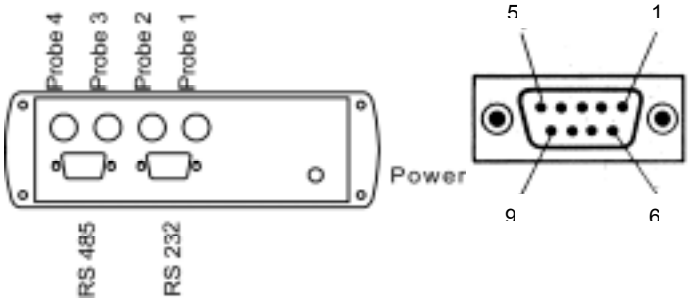

RS232 connector (9-pin Sub D)

Pin #	Function
2	TX
3	RX
5	GND

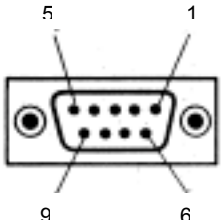

RS485 connector (9-pin Sub D)

Pin #	Function
1	RI +
5	GND (normally not used)
9	RI -

The RS232 connection between the HygroLab and a PC requires 3 wires: RX, TX and GND. Without a signal booster, the maximum cable length is limited to 150 m (490 ft). A connecting cable RS232 9pol ST-BU can be ordered form ROTRONIC (part number 11.01.6218 (1.8 m), 11.01.6230 (3 m), 11.01.6260 (6 m) and 11.01.6290 (10 m)).

The RS485 wiring can be done with a twisted pair (2-wire, telephone type) and wall mounted RJ45 receptacles. No shielded cable and no terminator should be required.

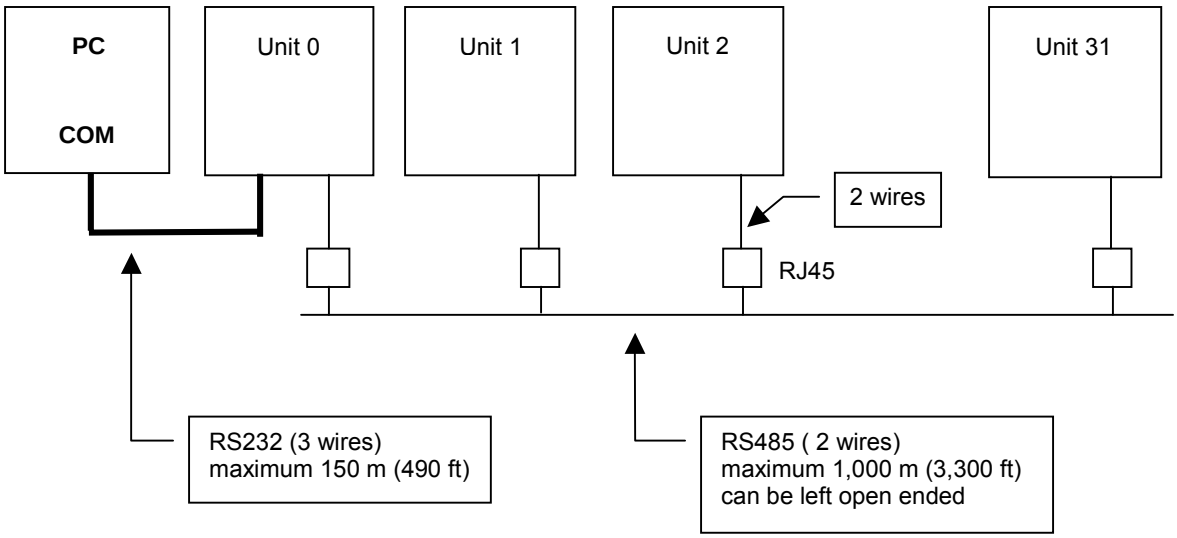

NOTE: prior to networking the instruments, they should be individually configured with the HW3 software (connect each instrument, one at a time, to the COM port of the PC) .
Be sure to give each instrument a unique network address (by default, instruments are given address 0 at the factory). For easier identification, you may also want to give at that time a descriptive name (maximum 30 characters) to each instrument.

Environmental Limits

The HygroLab can operate in the temperature range of –10...55°C (14…131°F) and should not be exposed to condensing humidity.

The operating limits at the probe depend on the probe model and are specified separately for each probe.

Maintenance

The HygroLab should not require any routine maintenance. See appendix 2 and appendix 3 regarding the maintenance of the probes.

Specifications

Power supply		AC Adapter 9 to 15VDC, 100 mA DC(+) Tip
Operating limits at electronics		0…99 %RH (non condensing) -10...55°C (14...131°F)
Measured parameters [1)]		
relative humidity	indication range	0.0…100.0 %RH
temperature	indication range	-99.9…999.9 °C or °F
barometric pressure [2)]	indication range	0.000…9999 hPa / PSI / In Hg
Calculated parameters [1) 3)]		
dew / frost point [4)]	indication range	-99.9…999.9 °C / °F
wet bulb temperature [5)]	indication range	0.0…100.0 °C / 32.0…212.0 °F
enthalpy [5)]	indication range	-99.9…9999 J/g or BTU/lb
vapor concentration	indication range	0.000…9999 g/m3 or gr/cuft
specific Humidity [5)]	indication range	0.000…9999 g/kg or gr/lb
mixing ratio [5)]	indication range	0.000…9999 g/kg or gr/lb
vapor concentration at saturation	indication range	0.000…9999 g/m3 or gr/cuft
part. pressure of water vapor	indication range	0.000…9999 hPa / PSI / In Hg
sat. pressure of water vapor	indication range	0.000…9999 hPa / PSI / In Hg
Number of probe inputs	HygroLab 1	2
	HygroLab 2	4
Probe type [6)]	All models	ROTRONIC HygroClip digital probe
	All models	ROTRONIC analog probe [7)]
	HygroLab 2	Third-party analog probe [7)]
A/D resolution (analog probes)	All models	10-bit
Display		Alphanumerical LC display
Serial output (except HygroLab 1)		RS 232 / RS485
Housing material		Aluminum
Housing dimensions		220 x 170 x 55 mm (8.66 x 6.69 x 2.16”)
Weight		1.0 kg (2.2 lb)

1) Specify engineering units when ordering (can be changed by user with optional HW3 software). See separate probe specifications regarding the different range limits
2) Not available with HygroLab 1
3) Not available with HygroLab 1. The accuracy of the computed parameter is limited by the accuracy of the measured parameters on which it is based
4) The standard factory setting is frost point for values below freezing. This setting can be changed to dew point with the optional HW3 software
5) A fixed pressure value is used for the computations of this parameter. The fixed pressure value can be changed by the user with the optional HW3 software. The HygroLab 2 can also be programmed to accept the input from a pressure probe (variable pressure value)
6) Accuracy, repeatability and operating limits are specified separately for each model of probe
7) ROTRONIC analog probes: because the HygroLab cannot read a negative input voltage, temperature measurement with probes having a standard output is generally limited to values above freezing. Third-party probe (pressure or other): linearized voltage output signal within the range of 0..2.5 VDC, supply voltage 9 VDC, 10 mA max.

Appendix 1: Practical Advice for Measuring Humidity

The most common source of error when measuring relative humidity is a difference between the temperature of the probe and the temperature of the environment. At a humidity condition of 50 %RH, a temperature difference of 1°C (1.8 °F) typically results in an error of 3 %RH on relative humidity.

When using a humidity probe with an indicator, it is good practice to monitor the display for temperature stability. The probe should be given sufficient time to equilibrate with the environment to be measured. The larger the initial temperature difference between the probe and the environment to be measured, the more time temperature equilibration requires. This time can be shortened, and errors avoided, by using the probe configuration that fits best for your application.

In extreme situations, condensation may occur on the sensors when the probe is colder than the environment. As long as the humidity / temperature limits of the humidity sensor are not exceeded, condensation does not alter the calibration of the sensor. However, the sensor has to dry out before it can provide a valid measurement.

Non-moving air is an excellent insulator. When there is no air movement, surprising differences in temperature and humidity can noted over short distances. Air movement at the probe generally results in measurements that are both faster and more accurate.

Appendix 2: Maintenance of the ROTRONIC probes

Cleaning or Replacing the Dust Filter of the Probe

Most ROTRONIC probes come with one of the following types of dust filter: (a) protective metal base with a removable filter cartridge or (b) plastic slotted cap with built-in (not removable) filter element.

Depending on the conditions of measurement, the cleanliness of the filter should be checked from time to time. If the probe has a removable filter cartridge, this can be easily removed for cleaning.

If the probe has a plastic slotted cap with a built-in filter element, cleaning should be done <u>without</u> removing the filter from the probe. In that case, do not use detergents, solvents or other strong chemicals. Either brush the filter or use a little bit of clean water.

Corroded, discolored or clogged filters should be replaced. If the probe has a removable cartridge, simply replace the cartridge (leave the metal base on the probe).

If the probe has a plastic slotted cap with built-in filter element follow these instructions:

1) Unscrew the filter from the probe and pull it straight away, in the alignment of the probe, so as not the catch the humidity and temperature sensors.
2) Before putting on a new dust filter, check the alignment of both sensors with the probe. The wires that connect the sensors to the probe are very thin and bend easily. If necessary, correct the alignment by tapping the sensor <u>very gently</u> with a smooth object such as a small

plastic rod. Do not use sharp pliers or tweezers as this could puncture the sensor and do not pull hard on the sensor.

Periodic Calibration Check of the Probes

Long term stability of the ROTRONIC Hygromer humidity sensor is typically better than 1 %RH per year. For maximum accuracy, calibration of the probe should be verified every 6 to 12 months. Applications where the probe is exposed to significant pollution may require more frequent verifications.

Both the Pt 100 RTD temperature sensor and associated electronics are very stable and should not require any calibration after the initial factory adjustment.
For routine calibration checks, the probe should be verified at one or two values of humidity. For more details, see Calibration Basics and Functions – ADJUST M.PT.

For customers who do not want to get involved with field calibrations, our unique probe exchange program offers an attractive alternative. This program takes advantage of the interchangeability of the ROTRONIC HygroClip digital probes. Replacement probes are fully calibrated and are rehabilitated probes with a brand new humidity sensor and filter.

Appendix 3: Calibration Basics

The following choices are available to calibrate the HygroClip probe(s) used with the HygroLab:

a) Calibration using the HygroLab display and keypad (see Functions).
b) Calibration using a PC with the optional HW3 software (see separate instructions for the HW3 software) – This choice is available only with the HygroLab 2, after connecting the HygroLab to the COM port of the PC.
c) Calibration of the probe alone (removed from the HygroLab), using a PC with the optional HW3 software and the MOK-WIN or T7-WIN calibration cable (see separate instructions for the HW3 software).

Note: the HygroLab itself should not require any field calibration.

Temperature Calibration

Note: the stability of the Pt100 RTD sensor used to measure temperature is such that temperature calibration in the field is seldom required.

In order to be able to correctly evaluate the accuracy of the temperature measurements provided by the probe, you should be able to meet the following requirements:

a) Both the probe and a reference thermometer should be ventilated with the same stream of air. Any dust filter used to protect the sensors should be carefully removed from the probe. If the probe has a protective slotted cap, this may be left on the probe.

b) Air velocity at the sensor should be within the limits of 200 to 500 feet/minute (1 to 2.5 meters/second). Any comparison between two instruments at a velocity under 200 feet/minute may not be valid. Air velocity above 500 feet/minute may damage the unprotected humidity sensor.

c) The temperature of the air stream should be practically constant.

If you cannot meet the above requirements, you should not attempt to calibrate temperature.

Humidity Calibration

ROTRONIC provides easy-to-use, certified humidity standards for those customer who do not have access to a humidity generator. To use these standards, you will need a calibration device that is suitable for your probe.

Calibration Device

The calibration device is a small airtight container that fits on the probe and seals around the humidity sensor. During calibration, a known reference humidity is produced inside the calibration device by means of a humidity standard (usually an aqueous salt solution). To find out which model of calibration device is suitable for your probe, please consult the probe documentation.

Certified Humidity Standards

The ROTRONIC certified standards are available in boxes of 5 glass ampoules of the same value, which can be stored indefinitely. Standards in the range of 5 to 95 %RH are non-saturated aqueous salt solutions that are precisely titrated at our factory for the right concentration. The 0 %RH humidity standard is made of small granules of a highly porous ceramic that have been dried at a high temperature. A Material Safety Data Sheet is available for each standard. Since most standards are a salt solution, parts which have come in contact with the liquid should be cleaned after each use.

Each box of standards comes with a certificate that provides statistical information on the manufacturing batch of the standard. Information on the effect of temperature on each standard is provided on the cover of each box of standard. When calibrating either with the HygroLab or with the HW3 software, the effect of temperature on the standards is compensated by the software and no further correction is required. The value of the standards is not affected by altitude.

Instructions for using the Standards

- Install the calibration device on the probe so that the receptacle (or solution holder) is under the probe. Check for a tight fit and remove the receptacle from the calibration device.
- Place one fiber disc (each box of standards includes 5 discs) in the receptacle of the calibration device. The purpose of this disc is to prevent accidental spilling of the solution inside the calibration device or on the humidity sensor.
- Tap the top of the ampoule so that all liquid drops to the bottom of the ampoule. Snap off top and empty contents on fiber disc. Since the ampoule is made of glass, exercise proper caution (gloves, safety glasses) when snapping off the top.
- Put the receptacle back on the calibration device and make sure that the solution does not come in contact with the sensor: The solution inside the calibration device should never be on top of the sensors.
- Allow at least 60 minutes to insure that the calibration device, the solution and the sensor are in a state of equilibrium. This is verified by monitoring the display.
- After adjusting the probe, remove the receptacle from the calibration device. Throw away the wet disc (non reusable). Thoroughly wash and wipe dry the receptacle.

General Recommendations

During calibration, temperature stability is the single most important requirement. If possible, calibrate the probe is room temperature (18 to 25°C). Room temperature should be stable to ±0.25°C or better during the period of time required for each calibration point. Do not calibrate close to an air vent or a heater, in direct exposure to sun rays, etc.

If using a humidity generator to calibrate the probe, make sure that the probe is as fully immersed in the generator as possible to minimize temperature effects.

Instruments Configured to Display Water Activity

Calibrate, the HygroLab exactly as if it were configured to display humidity in %RH. Do not convert the value of the humidity standard to Aw.

Appendix 4: Humidity Definitions

Relative Humidity and Water Activity

Relative humidity is the ratio of two pressures: %RH = 100 x p/ps where p is the actual partial pressure of the water vapor present in the ambient and ps the saturation pressure of water at the temperature of the ambient.

Relative humidity sensors are usually calibrated at normal room temperature (above freezing). Consequently, it generally accepted that this type of sensor indicates relative humidity with respect to water at all temperatures (including below freezing).

Ice produces a lower vapor pressure than liquid water. Therefore, when ice is present, saturation occurs at a relative humidity of less than 100 %. For instance, a humidity reading of 75 %RH at a temperature of -30°C, corresponds to saturation above ice.

Water activity is the same as relative humidity except for the fact that it is expressed in p.u. instead of %RH: 100.0 %RH = 1.000 Aw.

Dew Point / Frost Point Temperature

The dew point temperature of moist air at the temperature T, pressure P_b and mixing ratio r is the temperature to which air must be cooled in order to be saturated with respect to water (liquid).

The frost point temperature of moist air at temperature T, pressure P_b and mixing ratio r is the temperature to which air must be cooled in order to be saturated with respect to ice.

Wet Bulb Temperature

The wet bulb temperature of moist air at pressure P_b, temperature T and mixing ratio r is the temperature which the air assumes when water is introduced gradually by infinitesimal amounts at the current temperature and evaporated into the air by an adiabatic process at constant pressure until saturation is reached.

Vapor Concentration

The vapor concentration (density of water vapor in a mixture) or absolute humidity, is defined as the ratio of the mass of water vapor M_v to the volume V occupied by the mixture.

$D_v = M_v / V$, expressed in grams/m^3 or in grains/cu ft

This can be derived as follows from the equation PV = nRT:

a) $Mv = n \times m_w$, where :

n = number of moles of water vapor present in the volume V
m_w = molecular mass of water

b) $D_v = M_v /.V = n \times m_w / V = m_w \times p / RT$, where:

m_w = 18.016 gram
p = partial pressure of water vapor [Pa]
R = 8.31436 Pa x m3 / °K x mole
T = temperature of the gas mixture in °K

D_v [g / m^3] = p / 0.4615 x T

1 gr (grain) = 0.0648 g (gram)
1 cu ft = 0.0283168 m^3

D_v [gr / cu ft] = 0.437 x D_v [g / m^3]

Specific Humidity

The specific humidity (also known as mass concentration or moisture content of moist air) is the ratio of the mass M_v of water vapor to the mass ($M_v + M_a$) of <u>moist</u> air in which the mass of water vapor M_v is contained.

$Q = M_v / (M_v + M_a)$

$Q = p\, m_w / (p\, m_w + (P_b - p)\, m_a)$

Q [g / kg] = $1000\, p / (1.6078\, P_b - 0.6078\, p)$

1 gr (grain) = 0.0648 g (gram)
1 lb = 0.4535923 kg

Q [gr / lb] = 7 x Q [g / kg]

Mixing Ratio by Weight

The mixing ratio r of moist air is the ratio of the mass M_v of water vapor to the mass M_a of dry air with which the water vapor is associated:

$r = M_v / M_a$

$M_v = n \times m_w = m_w \times p\ V / RT$

$M_a = n \times m_a = m_a \times p_a\ V / RT = m_a \times (P_b - p) / RT$, where:

m_w = 18.016 gram
m_a = 28.966 gram
p = partial pressure of water vapor [Pa]
p_a = partial pressure of dry air [Pa]
P_b = total or barometric pressure [Pa]
R = 8.31436 Pa x m3 / °K x mole
T = temperature of the gas mixture in °K

$r = m_w\ p / m_a\ (P_b - p)$

$r = 621.97 \times p / (P_b - p)$ [g / kg]

1 gr (grain) = 0.0648 g (gram)
1 lb = 0.4535923 kg

r [gr / lb] = 7 x r [g / kg]

Enthalpy

The enthalpy (or energy content) of moist air at pressure P_b, temperature t (°C) and mixing ratio r (g/kg) is defined by:

h [kJ / kg moist] = 1.00464 t + 0.001846 r x t + 2.5 r

Note: by convention, the enthalpy of dry air (r = 0) at 0°C is equal to zero. Negative values of enthalpy are possible and indicate that the energy content of the air / vapor mixture is less than the energy content of dry air at 0°C

1 lb = 0.4536 kg
1 BTU = 1.05507 kJ

h [BTU / lb] = 0.4299 x h [kJ / kg] + 7.68

The value 7.68 is added to reference enthalpy in BTU / lb to the temperature of 0°F.

Appendix 5: Dew Point Accuracy

The HygroLab 2 uses the relative humidity and temperature measurements to compute another parameter such as dew point, mixing ratio, enthalpy, etc. The accuracy of this conversion varies, depending on the humidity and temperature conditions. Typical accuracy for the dew point conversion is provided in the graph below:

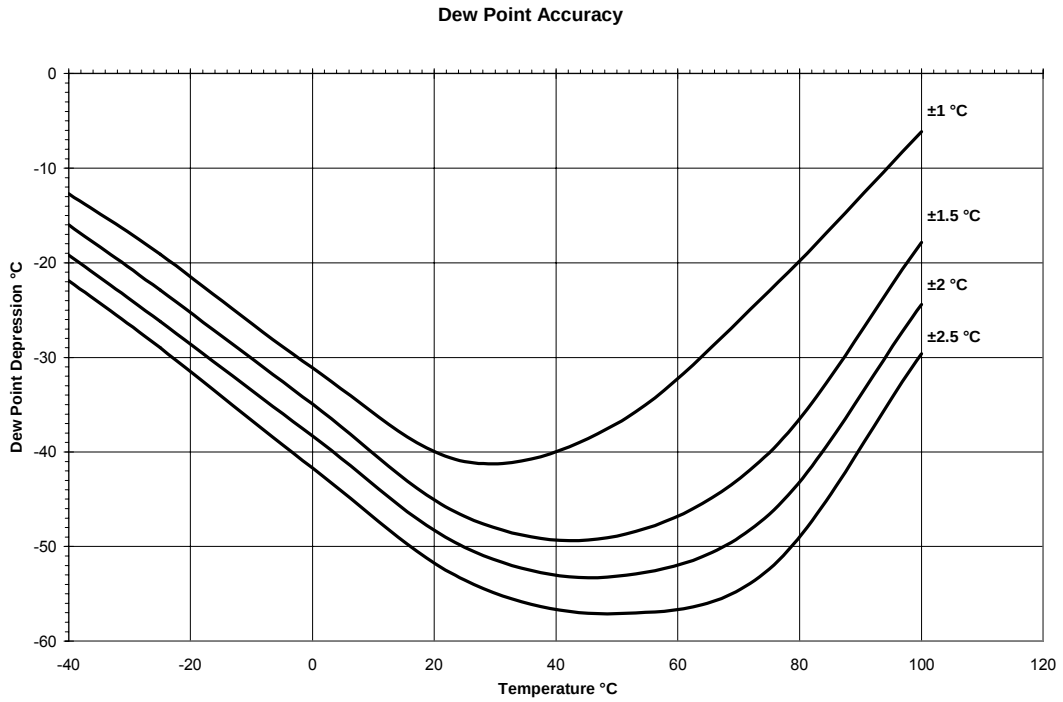

The accuracy of the dew point conversion is less than the accuracy that is normally achieved with a chilled mirror instrument. This is especially true at low dew point values (dew point depression of more than -40…-50°C) and at low temperatures. In many applications, repeatability is more critical than accuracy. Repeatability of the dew point conversion is typically 1/3 of the accuracy shown above. Using a dew point conversion permits to measure conditions that cannot be measured with a chilled mirror instrument. Typically, the measuring head of a chilled mirror instrument is limited to a maximum of 70°C and, therefore, cannot measure a dew point temperature above 70°C. In addition to the ability to operate at high temperature, the relative humidity probe offers significant advantages for industrial applications: less maintenance and higher tolerance to contaminants, no sampling system, no uncertainty between dew and frost and better response to fast changing conditions.

Appendix 6: RS232 Communication Protocol

The following describes the RS232 communication protocol that is used by the instruments from ROTRONIC when connected to the COM port of a PC:

Connections

The exchange of data requires 3 wires: TXD (transmit), RXD (receive) and SG (signal ground). When the instrument requires power from the COM port (MOK-WIN), the RTS and DTR wires are also used.

RS232 Settings

Normally, communication is done at the rate of 19200 bps. When there is a large amount of data to be exchanged (file read), the baud rate can be increased to 38400 bps.

In principle, only 7-bit ASCII characters (ASCII 32 to 127) are being used. The exception is File Read, where 8-bit characters are being used.

Normal settings:

Baud rate	: 19200
Parity	: even
Data bits	: 7
Stop bits	: 1
Flow Control	: none

Force incoming data to 7-bit ASCII.

Data Integrity

- 7-bit characters are sent with a parity bit. 8-bit characters are sent without parity bit.
- Strings (made of 7-bit characters) can be sent with or without checksum at the end of the string. When the checksum is not known – for example: when sending a command - the checksum is replaced by the } character at the end of the string.
- For the transmission of files (8-bit characters), it is planned to use predefined initialization and end-of-communication sets of characters with a checksum.

Communication

Any communications program such as Windows Hyperterminal can be used to read the data on a PC screen. Communication with the instrument is always initiated from the PC. Any string sent from the PC should begin with the { character to start the synchronization. This should be followed by a 1-character product identification (see table below). The address is next (this is a 2-digit number between 00 and 31 used to distinguish between the different instruments, probes, functions etc. that are connected to the PC). The address is followed by a command and by any values or parameters that may be required to carry out the command. Use a carriage return (CR) to terminate the command string.

Example: {b00RDD} + CR (asks instrument b00 to send measurement data)

When several instruments are connected together (RS485 network), commands directed to instruments other than the instrument that is physically connected to the COM port of the PC should be preceded with the | character (ASCII 124)

Example: |{M01RDD} + CR

The instrument answers with a string beginning with the { character, the product identification and the address, followed by the command that was received and any data field that may have been requested by the command. This is followed by a checksum. The length of the string may vary, depending on how much data is included. Since the string itself does not include any information about its own length, a carriage return (CR) is always used to terminate the string.

Example: {M01RDD 0027.50;0067.17;0029.31;0064.27;#M (terminated with CR)

where:

{M01RDD : repeats the command + blank space

0027.50 : %RH – probe 1
; : separator
0067.17 : °F – probe 1 (temperature unit depends on instrument configuration with HW3)
; : separator
0029.31 : %RH – probe 2 (optional)
; : separator
0064.27 : °F – probe 2 (optional)
; : separator
#M : check sum

Note: Some instruments may insert the $ character at the second or third position of the string.

1-character Product Identification

ID	Product	Examples (the instrument will answer the following command)
a	A1H	{a00M} + CR
d	I3000, I3000S	{d00zY + CR – assuming the address is 0
d	BT-RS	{d02z] + CR
w	HygroWin	Not Applicable
x	MOK-Win	{x00M} + CR
0	HygroPalm 1	Not Applicable
u	HygroPalm 2	{u00RDD}+CR – assuming the address is 0
U	HygroPalm 3	{U00RDD}+CR – assuming the address is 0
1	HygroFlex 1	Not Applicable
m	HygroFlex 2	{m00RDD}+CR – assuming the address is 0

M	HygroFlex 3	{M00RDD}+CR – assuming the address is 0
2	HygroLab 1	Not Applicable
b	HygroLab 2	{b00RDD}+CR – assuming the address is 0
B	reserved	{B00RDD}+CR – assuming the address is 0
X	reserved	{X00RDD}+CR – assuming the address is 0

CR=Chr(13)

Special Situations (single instrument)

Using address 99 in a data request causes instruments with any address to answer. For this reason, address 99 should not be used when several instruments are connected to a network. Address 99 can be useful when trying to communicate with a single instrument of unknown address. The address is returned as part of the answer string.

When the product ID is unknown, it can be replaced with a blank in the command. The product ID is returned as part of the answer string.

Example: { 99RDD}+CR

Examples

Data can be read from the instrument directly connected to the COM port of the PC (RS232) as well as from any instrument that is networked (RS485).The following examples are for the HygroLab. The same commands can be used for other instruments with similar capabilities by substituting the appropriate values for the product ID and address.

1) read %RH and temperature from the HygroLab 2 (with 2 probes), directly connected to the PC COM port (RS232):

data request: {b01RDD}+CR

answer: {b01RDD 0025.01;0016.89;0024.57;0019.84;----.--;----.--;----.--;----.--;#C

note: 0025.01: humidity probe 1 (%RH)
0016.89: temperature probe 1 (°C as per instrument configuration)
0024.57: humidity probe 2 (%RH), etc.

2) read %RH, temperature and computed parameter

data request: {b00RDD0;}+CR

answer: {b01RDD 0025.90;0015.82;-003.69;0024.47;0019.88;-001.00;----.--;----.--;----.—S

note: 0025.90: humidity probe 1 (%RH)
0015.82: temperature probe 1 (°C as per instrument configuration)
-003.69: dew point probe 1 (°C as per instrument configuration), etc.

3) read %RH and temperature from the HygroFlex 3 (1 probe) with address 00, connected by RS 485 to the HygroLab 2:

data request |{M00RDD} +CR note the | character (ASCII 124) preceding the command

answer: {M00RDD 0020.41;0019.87;----.--;----.--;#E

note: 0020.41: humidity probe 1 (%RH)
0019.87: temperature probe 1 (°C as per instrument configuration), etc.

Appendix 7: Accessories for the HygroLab

Order Code	Description
HW3	HW3 software (CD ROM)
AC1623	Cable service connector (MTA) HygroLab 1 to PC
MOK-02-DAT5	Extension cable to remote HygroClip probes with DAT05 connector. Cable length 2 meter (6.5 ft)
MOK-01-B5	Adapter cable for Hygroclip probes with DAT05 connector. Cable length 1 meter (3.2 ft)
T7-03-B5	Adapter cable for Hygroclip probes with T7 connector. Cable length 3 meter (9.8 ft)
MOKX-03-WIN	Calibration cable for HygroClip probes with DAT05 connector. Termiated with a 25-pin SUB-D connector. Converter 25-pin to 9-pin is supplied. Cable length 3 meter (9.8 ft). 9VDC adapter required (included with cable)
T7-03-WIN	Calibration cable for HygroClip probes with T7 connector. Termiated with a 25-pin SUB-D connector. Converter 25-pin to 9-pin is supplied. Cable length 3 meter (9.8 ft). 9VDC adapter required (included with cable)
EA00-SCS	0%RH humidity std, SCS cert., pack of 5
EA05-SCS	5%RH humidity std, SCS cert., pack of 5
EA10-SCS	10%RH humidity std, SCS cert., pack of 5
EA11-SCS	11%RH humidity std, SCS cert., pack of 5
EA20-SCS	20%RH humidity std, SCS cert., pack of 5
EA35-SCS	35%RH humidity std, SCS cert., pack of 5
EA50-SCS	50%RH humidity std, SCS cert., pack of 5
EA65-SCS	65%RH humidity std, SCS cert., pack of 5
EA75-SCS	75%RH humidity std, SCS cert., pack of 5
EA80-SCS	80%RH humidity std, SCS cert., pack of 5
EA95-SCS	95%RH humidity std, SCS cert., pack of 5
ER-15	calibration device for 15mm dia. Probes
ER-05	calibration device for 5mm dia. Probes
EM-15	calibration device for type ‘IE’ probes